

Cooking top, Induction, Single Zone, Drop -in

Model: E1HDEDOMCS • Article no: 600876

Power supply: 230V 1Ph ~50-60Hz

The mono-zone cooktop is designed for drop-in installation and constructed from AISI 304 stainless steel. The top features a sealed, heavy-duty 4 mm-thick glass-ceramic cooking surface. Induction technology transfers heat directly to the pan, minimizing heat dispersion into the environment. Automatic pan detection ensures that power is only delivered when a pan is present.

The top is operated via a glass touch display that provides clear visibility of power settings and timer functions. A two-color user interface (white and red) improves readability. The lock function prevents accidental changes to settings during operation, and the hot surface warning helps reduce the risk of injury. Suitable for pots and pans with diameters from 120 mm to 340 mm.

MAIN FEATURES

- One induction zone
- Suitable for pots and pans with a diameter from 120 mm to 340 mm
- Rapid heat transfer directly to the pan; no heat is dispersed into the environment
- Cord and plug included
- IPX4 water protection
- Lock function

Subject to change without notice.
For correct installation, refer to installation manual.

Technical data

Certifications & regulations

Certifications	CE
IP Class	X4

Dimensions & weight

Width, net (mm)	392
Depth, net (mm)	592
Height, net (mm)	127
Weight, net (kg)	14.5
Weight, gross (kg)	17
Volume, net (m3)	0.03

Electric

Voltage (V)	230
Phase	1
Has neutral	No
Frequency (Hz)	50-60
Connection Cable, length (m)	1.5
Connector side	Bottom
Fuse (A)	13
Loading (kW)	3.5
Plug type	Schuko

Functions & appearance

Induction/ceramic zones, qty (pcs)	1
Installation, type	Drop In
Noise level < (dB)	70
Range, type	Induction

General data

Country of origin	France
Variant Model Number	E1HDEDOMCS

DIMENSIONS

BOTTOM

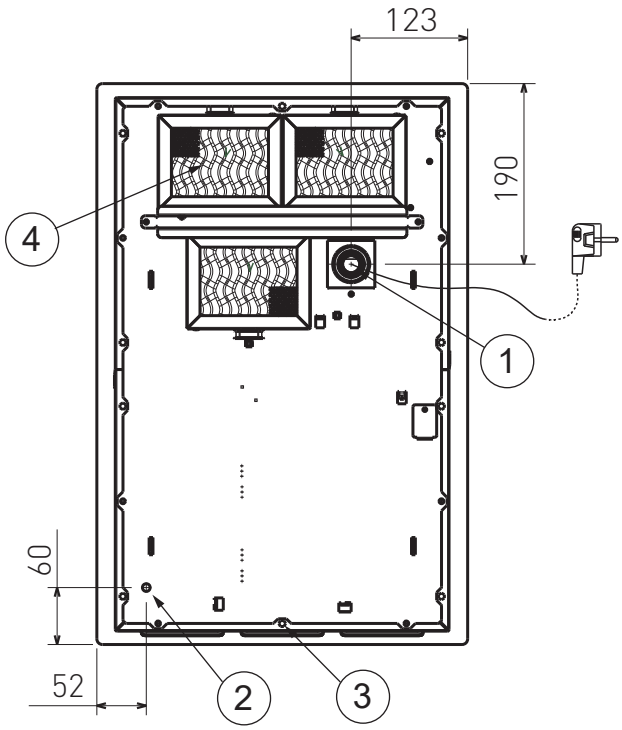

DIMENSION OF HOLE IN TOP

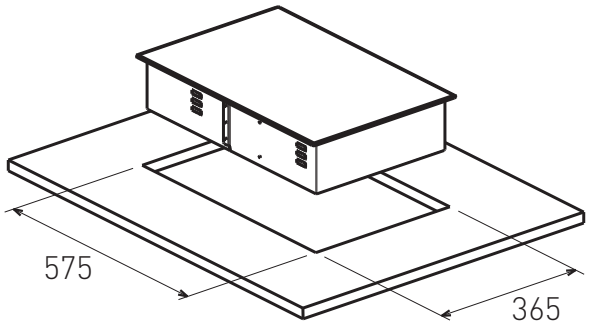

FRONT

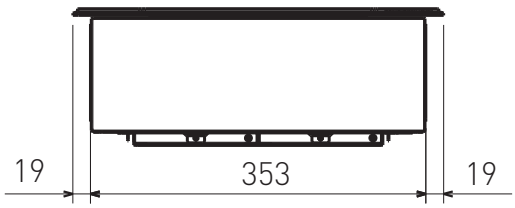

SIDE

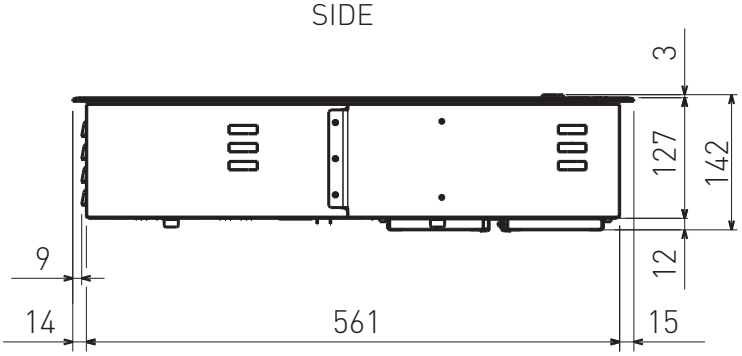

TOP

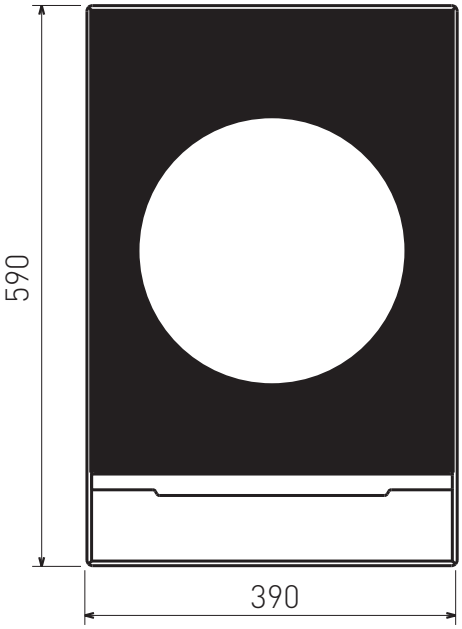

1. Electrical connection cable 1,5 m with Schuko plug
2. Equipotential screw
3 Air outlet
4. Air inlet

LOIPART