

Griddle, Induction Plug-In, Smooth Plate S/S

Model: E1IREEOMCS • Article no: 600886

Power supply: 230V 1Ph ~50-60Hz

The tabletop induction griddle has plug-in installation, outstanding cooking evenness, and fast recovery time. Induction technology ensures energy efficiency. The temperature can be set from 60 to 280 °C with the possibility of fine-tuning of 1 °C.

Glass touch display on top for maximum visibility with temperature indication—2-color user interface (white and red) for better readability.

The griddle has a non-stick cooking plate with a cleaning function: set the correct cooking surface temperature to activate Electrolux Professional C40 Rapid Grease detergent. Under the cooking surface, there is a grease drain integrated with a removable drawer.

A visual message is displayed when the hob is still hot to prevent injuries.
In case of dysfunction, an error code is displayed.
Induction air filters are easy to clean and remove for monthly cleaning.

MAIN FEATURES

- IPx4 water protection
- Temperature 60-280°C
- Non-stick cooking plate
- Plug in unit
- Energy efficiency with induction technology
- Cleaning function

E1IREEOMCS, 600886
9/30/2026 3:46 PM

Subject to change without notice.
For correct installation, refer to installation manual.

Technical data

Certifications & regulations

Certifications	CE
IP Class	X4

Dimensions & weight

Width, net (mm)	400
Depth, net (mm)	600
Height, net (mm)	227
Weight, net (kg)	26
Weight, gross (kg)	30
Volume, net (m3)	0.05
Volume, gross (m3)	0.07

Electric

Voltage (V)	230
Phase	1
Has neutral	No
Frequency (Hz)	50-60
Connection Cable, length (m)	1.5
Connector side	Bottom
Loading (kW)	3.5
Max Amps in Phase (A)	16
Plug type	Schuko

Functions & appearance

Griddle/Grill, type	Smooth
Cooking surface, dimensions (mm)	390x410
Installation, type	Table Top Model
Noise level < (dB)	70
Range, type	Induction

General data

Country of origin	France
Variant Model Number	E1IREEOMCS

Included in delivery

Loipart AB (HQ), **Sweden**
Tel: +46 313 920 100, loipart@loipart.com

LMG Finland Oy, **Finland**
Tel: +358 40 664 6680, lmg@lmg.fi

Loipart USA Inc., **USA**
Tel: +1 954 530 5276, loipartusa@loipart.com

Loipart SEA Pte Ltd, **Singapore**
Tel: +65 670 99 100, contact@loipart.sg

Scraper.

Loipart AB (HQ), **Sweden**
Tel: +46 313 920 100, loipart@loipart.com

LMG Finland Oy, **Finland**
Tel: +358 40 664 6680, lmg@lmg.fi

Loipart USA Inc., **USA**
Tel: +1 954 530 5276, loipartusa@loipart.com

Loipart SEA Pte Ltd, **Singapore**
Tel: +65 670 99 100, contact@loipart.sg

DIMENSIONS

BOTTOM

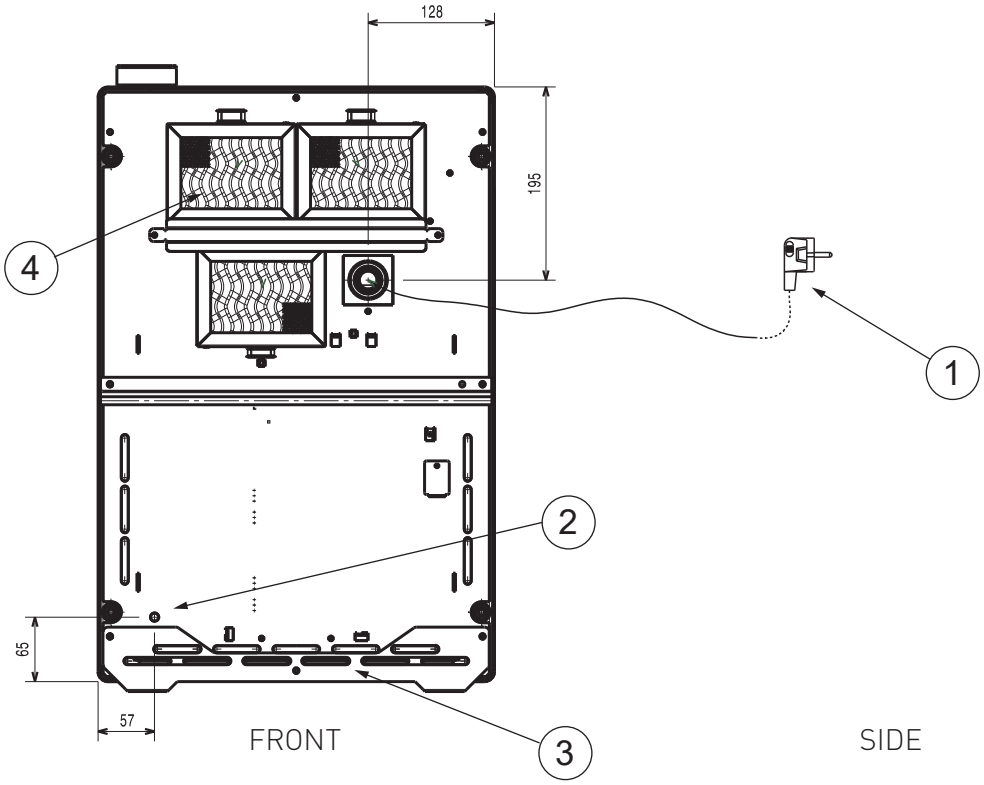

FRONT

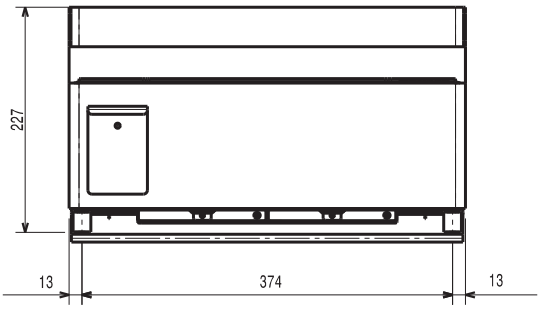

SIDE

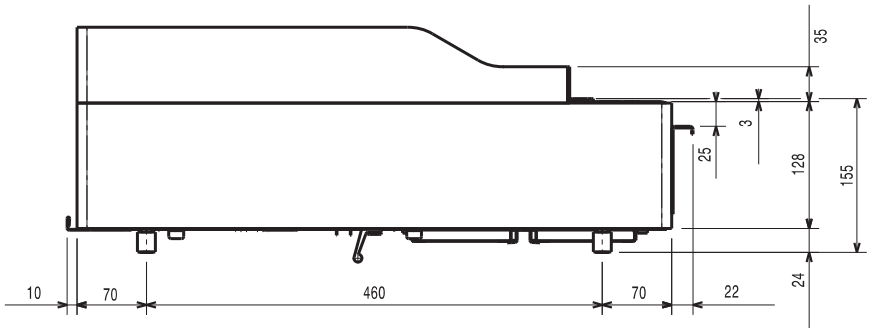

TOP

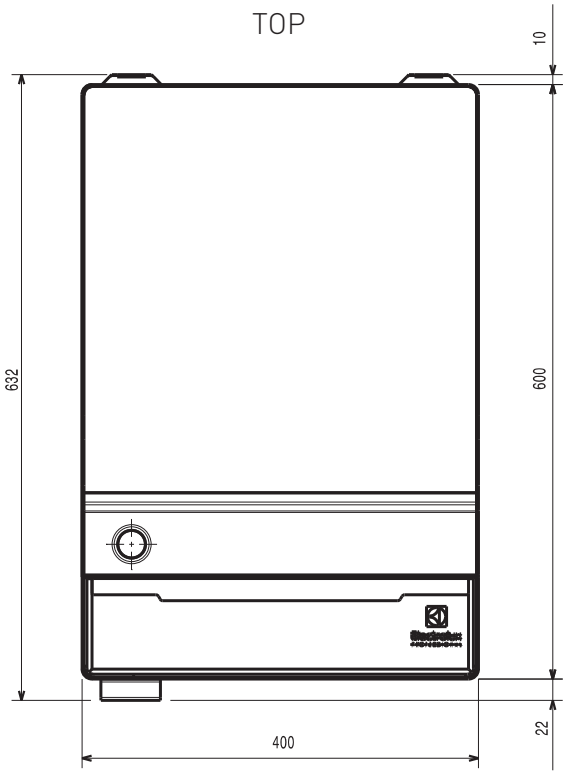

1. Electrical connection cable 1,5 m with Schuko plug
2. Equipotential screw
3 Air outlet
4. Air inlet

LOIPART