

Range, 4 Hot Plates And Oven

Model: E7ECMH4RE5 • Article no: 371148

Power supply: 400V 3Ph ~50/60Hz

The 700XP range is designed to guarantee the highest level of performance, reliability, energy saving, safety standards and ergonomic operation.
This freestanding electric range is ideal for kitchens needing a flexible, powerful and easy to clean cooking top mounted on an electric oven.
Four hermetically sealed 2.6kW cast-iron plates on a one-piece pressed 1.5 mm stainless steel worktop. Exterior panels are in stainless steel with Scotch Brite finish.
The oven has a recessed, double skinned, insulated door for air-tight closure and better hygiene. The cavity is in stainless steel with a vitreous enamelled ribbed base plate to allow direct placement of pans. Three levels of runners to accommodate 2/1GN shelves. Separate thermostats for the top and bottom elements adjustable from 140° to 300°C and power of 6 kW.
Main connections are accessible from below the base of the unit and all components from the front.
The range has marine feet in stainless steel, adjustable up to 50mm in height.

MAIN FEATURES

- Four 2.6kW cast-iron round plates are hermetically sealed to the one-piece top.
- Stainless steel oven chamber with 3 levels of runners for 2/1 GN shelves (2 steam pans).
- Ribbed enamelled steel oven base plate.
- Oven thermostat adjustable from 140 °C to 300 °C.
- IPX 4 water protection.
- All exterior panels in Stainless Steel

Subject to change without notice.
For correct installation, refer to installation manual.

Technical data

Certifications & regulations

IP Class	X4

Dimensions & weight

Width, net (mm)	800
Depth, net (mm)	730
Height, net (mm)	850
Weight, net (kg)	80
Weight, gross (kg)	100
Volume, net (m3)	0.74
Volume, gross (m3)	0.96

Electric

Voltage (V)	400
Phase	3
Has neutral	No
Frequency (Hz)	50, 60
Connection Cable, length (m)	0
Loading (kW)	16.4
Max Amps in Phase (A)	26.5
Plug type	None

Functions & appearance

Oven, included	Yes
Pan sizes	GN 2/1
Capacity, pans (pcs)	3
Adapted for container sizes	GN
Marine feet	Yes
Hot plate diameter (mm)	230
Hot plate, qty (pcs)	4
Hot plate, type	Round
Installation, type	Floor Model
Noise level < (dB)	70
Oven, type	Static
Range, type	Cast Iron

Loipart AB (HQ), **Sweden**
Tel: +46 313 920 100, loipart@loipart.com

LMG Finland Oy, **Finland**
Tel: +358 40 664 6680, lmg@lmg.fi

Loipart USA Inc., **USA**
Tel: +1 954 530 5276, loipartusa@loipart.com

Loipart SEA Pte Ltd, **Singapore**
Tel: +65 670 99 100, contact@loipart.sg

Temperature, max (°C)	300

General data

Country of origin	Italy
Variant Model Number	E7ECMH4RE5

Included in delivery

• 1 of GN2/1 chrome grid for static oven PNC 164250
• 1 of Frontal handrail, 800mm PNC 216047

Loipart AB (HQ), **Sweden**
Tel: +46 313 920 100, loipart@loipart.com

LMG Finland Oy, **Finland**
Tel: +358 40 664 6680, lmg@lmg.fi

Loipart USA Inc., **USA**
Tel: +1 954 530 5276, loipartusa@loipart.com

Loipart SEA Pte Ltd, **Singapore**
Tel: +65 670 99 100, contact@loipart.sg

DIMENSIONS

FRONT

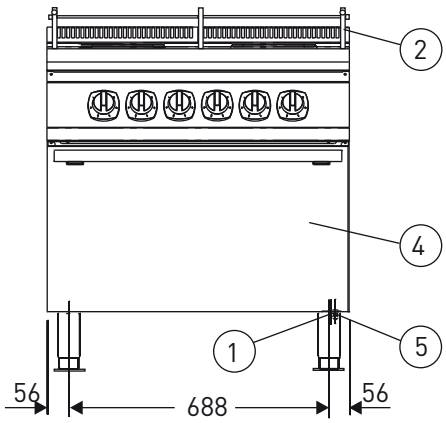

SIDE

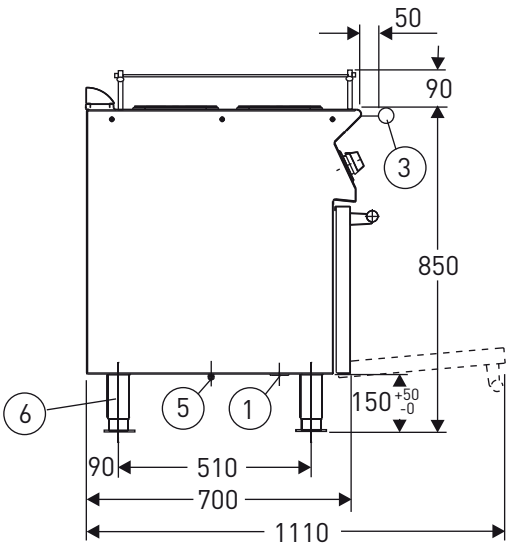

TOP

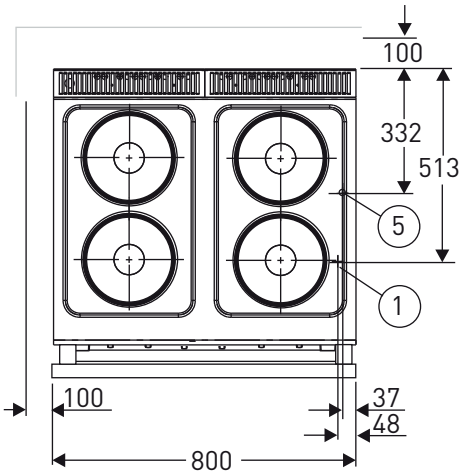

1. Electrical connection
2. Rolling rack
3. Front hand rail
4. Oven 6.0 kW
5. Equipotential screw
6. Marine legs

DETAIL MARINE FEET

