

Deep Fat Fryer 2X14 L

Model: E7FRMH2FF5 • Article no: 371164

Power supply: 400V 3Ph ~50/60Hz

The XP 700 range is designed to guarantee the highest level of performance, reliability, energy saving, safety standards and ergonomic operation.
The freestanding electric fryer is ideal for kitchens needing a versatile, efficient and easy to clean unit capable of cooking numerous portions time after time. The fryer has high efficiency liftable incoloy armoured heating elements placed inside the deep drawn well. Well with rounded corners for ease of cleaning. Right-angled side edges to allow flush-fitting joints between units, eliminating gaps and possible dirt traps. One piece pressed 1.5 mm worktop in Stainless steel. All exterior panels in Stainless Steel with Scotch Brite finishing. The oil drains through a tap into a drainage container positioned under the well and all major compartments located in front of unit or ease of maintenance. Optional portable oil quality monitoring tool (code 9B8081) for efficient oil management.

MAIN FEATURES

- IPX 4 water protection.
- Overheat protection thermostat
- Thermostatic regulation of oil temperature up to a maximum of 185 °C
- Liftable incoloy armoured heating elements

E7FRMH2FF5, 371164
9/30/2026 3:45 PM

Subject to change without notice.
For correct installation, refer to installation manual.

Technical data

Certifications & regulations

IP Class	X4
In complience with SOLAS	Yes

Dimensions & weight

Width, net (mm)	800
Depth, net (mm)	730
Height, net (mm)	850
Weight, net (kg)	72
Weight, gross (kg)	92
Volume, net (m3)	0.84
Volume, gross (m3)	1.09

Electric

Voltage (V)	400
Phase	3
Has neutral	No
Frequency (Hz)	50, 60
Loading (kW)	17.4
Max Amps in Phase (A)	25.2

Functions & appearance

Baskets, qty (pcs)	2
Capacity (L)	28
Fryer, type	InternalElement
Marine feet	Yes
Installation, type	Floor Model

General data

Country of origin	Italy
Variant Model Number	E7FRMH2FF5

Included in delivery

- 2 of Door for open base cupboard PNC 206350
- 2 of Full size basket for 14 and 15lt free standing fryers PNC 921691
- 2 of Lid

Loipart AB (HQ), **Sweden**
Tel: +46 313 920 100, loipart@loipart.com

LMG Finland Oy, **Finland**
Tel: +358 40 664 6680, lmg@lmg.fi

Loipart USA Inc., **USA**
Tel: +1 954 530 5276, loipartusa@loipart.com

Loipart SEA Pte Ltd, **Singapore**
Tel: +65 670 99 100, contact@loipart.sg

FRONT

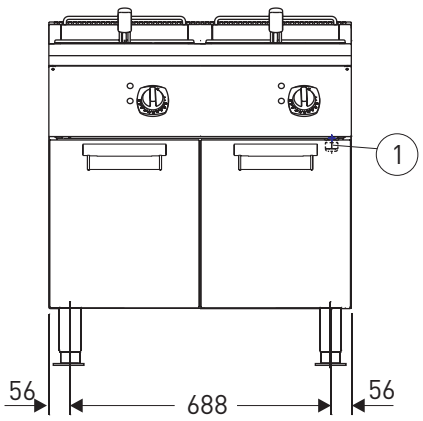

SIDE

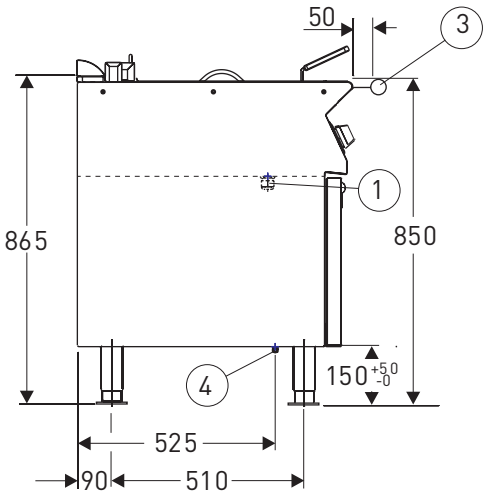

TOP

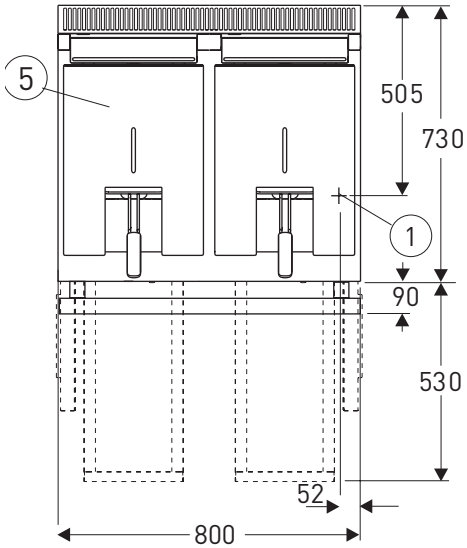

1. Electrical connection
2. Marine legs
3. Front hand rail (optional)
4. Eqiupotential screw
5. Lid (included in delivery)

DETAIL MARINE FEET

