

Grill On Base, 800 mm

Model: E7GREHGCFU • Article no: 371242M

Power supply: 400V 3Ph ~50/60Hz

An electric grill with heating elements made of Incoloy armor placed below the cooking plate. Grids in enameled cast iron can be easily removed for cleaning.

The exterior panels are in stainless steel with a Scotch Brite finish. The one-piece pressed top in 1.5 mm thick stainless steel—right-angled side edges to allow flush-fitting junction between units. The model has high stainless steel splash guards on the rear and sides of the cooking surface. The splash guards can be easily removed for cleaning and are dishwasher-safe.

MAIN FEATURES

- Heating elements can be tilted frontally for easy cleaning
- Incoloy armored heating elements
- Separate control knobs for each half module
- Grids in highly resistant enameled cast iron for easy cleaning

Subject to change without notice.
For correct installation, refer to installation manual.

Technical data

Certifications & regulations

Certifications	CE
IP Class	X4

Dimensions & weight

Width, net (mm)	800
Depth, net (mm)	730
Height, net (mm)	850
Weight, net (kg)	87
Weight, gross (kg)	97

Electric

Voltage (V)	400
Phase	3
Has neutral	No
Frequency (Hz)	50, 60
Connection Cable, length (m)	0
Connector side	Bottom
Plug type	None

Functions & appearance

Cooking surface, dimensions (mm)	631x478
Marine feet	Yes
Installation, type	Floor Model

General data

Country of origin	Italy
Variant Model Number	E7GREHGCFU

Included in delivery

1 pc of scraper.

Loipart AB (HQ), **Sweden**
Tel: +46 313 920 100, loipart@loipart.com

LMG Finland Oy, **Finland**
Tel: +358 40 664 6680, lmg@lmg.fi

Loipart USA Inc., **USA**
Tel: +1 954 530 5276, loipartusa@loipart.com

Loipart SEA Pte Ltd, **Singapore**
Tel: +65 670 99 100, contact@loipart.sg

DIMENSIONS

FRONT

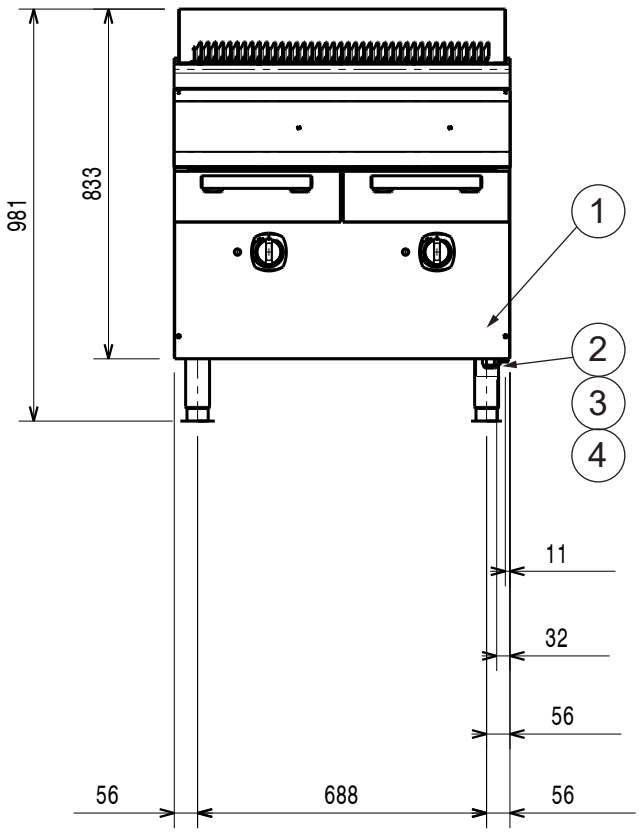

SIDE

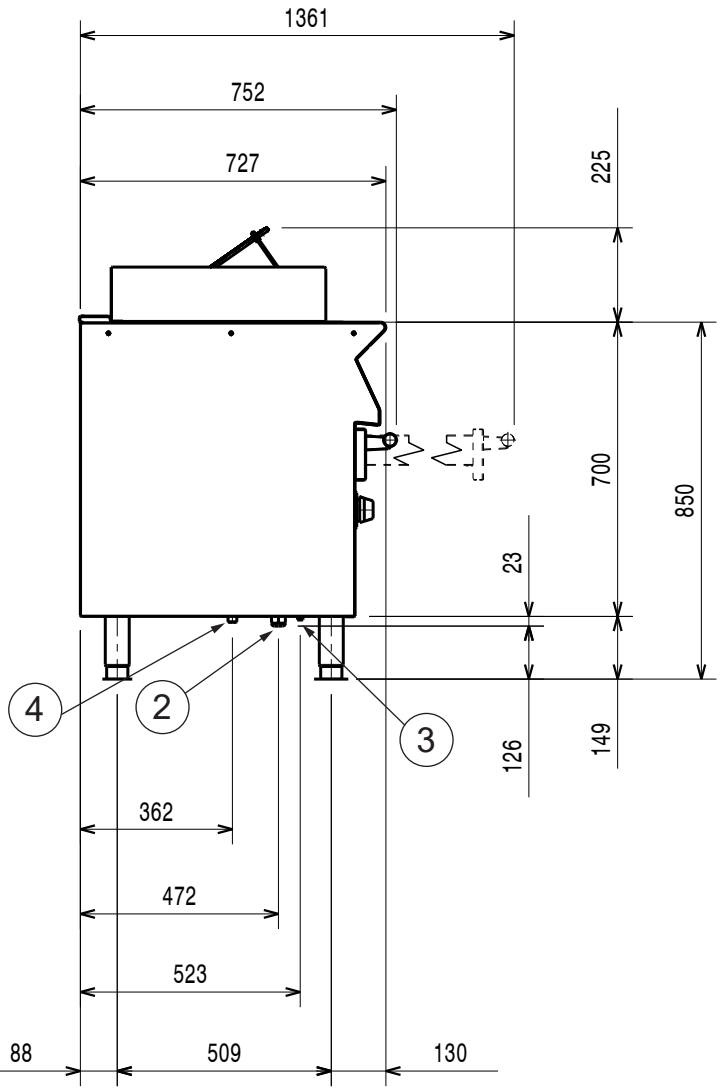

TOP

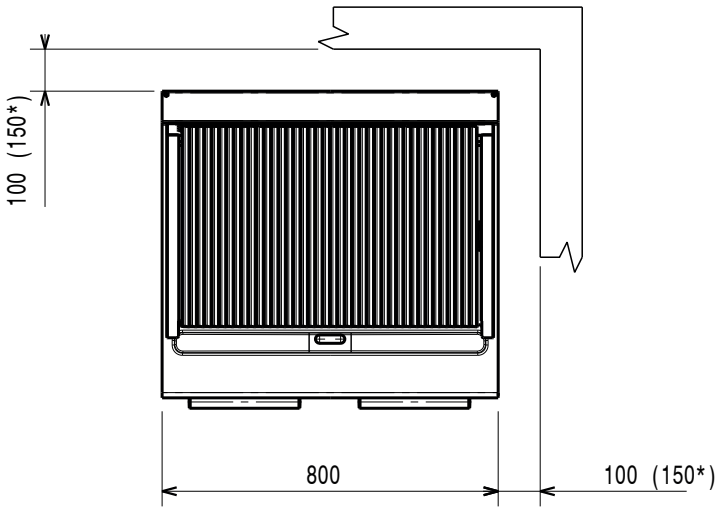

1. Electrical connection point (terminal board) located behind the front panel
2. Electrical supply inlet
3. Equipotential screw
4. Water inlet (optional extras)

* If the appliance is set up or next to or against temperature sensitive furniture or similar, a safety gap of approximately 150 mm should be maintained or some form of heat insulation fitted.

LOIPART

DIMENSIONS

DETAIL MARINE FOOT

