

Cooking Top, 2 Hot Plates

Model: E9ECMD2Q05 • Article no: 391180

Power supply: 400V 3Ph ~50/60Hz

The 900XP range is designed to guarantee the highest level of performance, reliability, energy saving, safety standards and ergonomic operation.
This cooking top is to be installed on open base installations, bridging supports or cantilever systems.
2 mm stainless steel heavy-duty worktop with two 4 kW square cast-iron hot plates which are hermetically sealed.
Right-angled side edges to allow flush-fitting junction between units.
The model has stainless steel exterior panels with a Scotch Brite finish.

MAIN FEATURES

- The design of the control knob system guarantees against water infiltrationUnit to be mounted on open base cupboards, bridging supports or cantilever systemsTwo hermetically sealed 4kW cast-iron square platesAISI 304 stainless steel worktop, 2mm thickAll exterior panels in Stainless Steel with Scotch Brite finishingModel is 930 mm deep to give a larger working surface area

E9ECMD2Q05, 391180
9/30/2026 3:41 PM

Subject to change without notice.
For correct installation, refer to installation manual.

Technical data

Certifications & regulations

IP Class	X5

Dimensions & weight

Width, net (mm)	400
Depth, net (mm)	930
Height, net (mm)	251
Weight, net (kg)	38
Weight, gross (kg)	53
Volume, net (m3)	0.25
Volume, gross (m3)	0.33

Electric

Voltage (V)	400
Phase	3
Has neutral	No
Frequency (Hz)	50, 60
Loading (kW)	8
Max Amps in Phase (A)	17.4

Functions & appearance

Oven, included	No
Hot plate dimensions (mm)	300X300
Hot plate, qty (pcs)	2
Hot plate, type	Square
Installation, type	Table Top Model
Range, type	Cast Iron

General data

Country of origin	Italy
Heat Emission (kW)	6.4
Variant Model Number	E9ECMD2Q05

Included in delivery

Rolling rack and front handrail.

Loipart AB (HQ), **Sweden**
Tel: +46 313 920 100, loipart@loipart.com

LMG Finland Oy, **Finland**
Tel: +358 40 664 6680, lmg@lmg.fi

Loipart USA Inc., **USA**
Tel: +1 954 530 5276, loipartusa@loipart.com

Loipart SEA Pte Ltd, **Singapore**
Tel: +65 670 99 100, contact@loipart.sg

DIMENSIONS

FRONT

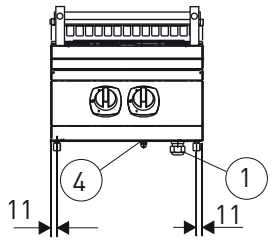

SIDE

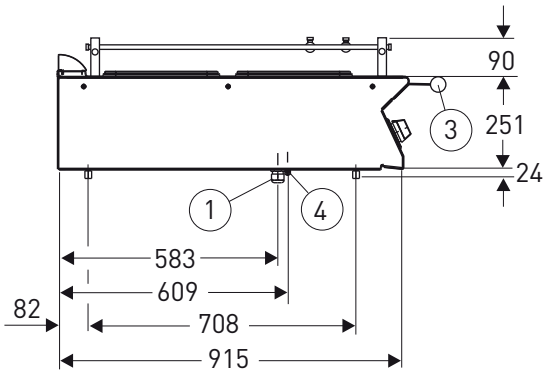

TOP

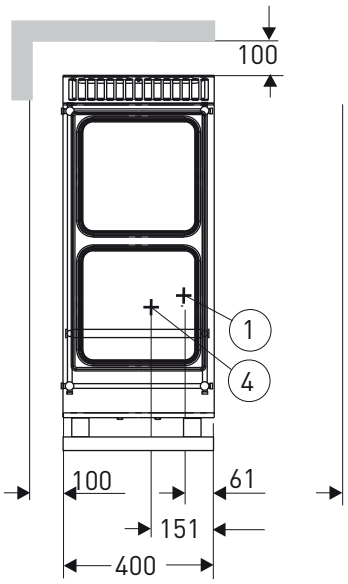

1. Electrical connection
2. Rolling rack
3. Front hand rail
4. Equipotential screw