

Griddle, Smooth, 800 mm

Model: E9FTEHHS00 • Article no: 391400

Power supply: 400V 3Ph ~50/60Hz

A smooth cooking griddle with a surface in brushed chrome that is highly resistant to scratches facilitates cleaning operations at the end of the day. The top is to be mounted on open base cupboards, bridging supports, or cantilever systems. A large drain hole on the cooking surface permits fat to drain into a large collector placed under the cooking surface.

The model has electric elements in incoloy positioned under the cooking plate. It features separate controls for each half module of the cooking surface, a safety thermostat, and thermostatic control. The design of the control knob system guarantees against water infiltration, and the temperature can be set from 120° up to 280°C.

The griddle has high stainless steel splash guards on the rear and sides of the cooking surface. These splash guards can be easily removed for cleaning and are dishwasher-safe.

Note: The handrail is available as an optional extra.

MAIN FEATURES

- Smooth brushed chrome cooking plate
- High level of performance and fast heat-up time
- Safety thermostat and thermostatic control
- Large drain hole for fat and grease

Subject to change without notice.
For correct installation, refer to installation manual.

Technical data

Certifications & regulations

Certifications	CE
IP Class	X5

Dimensions & weight

Width, net (mm)	800
Depth, net (mm)	930
Height, net (mm)	250
Weight, net (kg)	105
Weight, gross (kg)	120
Volume, net (m3)	0.29
Volume, gross (m3)	0.37

Electric

Voltage (V)	400
Phase	3
Has neutral	No
Frequency (Hz)	50, 60
Connection Cable, length (m)	0
Connector side	Bottom
Loading (kW)	15
Plug type	None

Functions & appearance

Griddle/Grill, type	Smooth
Cooking surface, dimensions (mm)	730x700
Cast iron pan	No
Installation, type	Top Model
Range, type	Steel

General data

Country of origin	Italy
Variant Model Number	E9FTEHHS00

Included in delivery

1 of Scraper for smooth plate fry tops

Loipart AB (HQ), **Sweden**
Tel: +46 313 920 100, loipart@loipart.com

LMG Finland Oy, **Finland**
Tel: +358 40 664 6680, lmg@lmg.fi

Loipart USA Inc., **USA**
Tel: +1 954 530 5276, loipartusa@loipart.com

Loipart SEA Pte Ltd, **Singapore**
Tel: +65 670 99 100, contact@loipart.sg

1 of Stopper for fry top with a horizontal plate

Loipart AB (HQ), **Sweden**
Tel: +46 313 920 100, loipart@loipart.com

LMG Finland Oy, **Finland**
Tel: +358 40 664 6680, lmg@lmg.fi

Loipart USA Inc., **USA**
Tel: +1 954 530 5276, loipartusa@loipart.com

Loipart SEA Pte Ltd, **Singapore**
Tel: +65 670 99 100, contact@loipart.sg

DIMENSIONS

FRONT

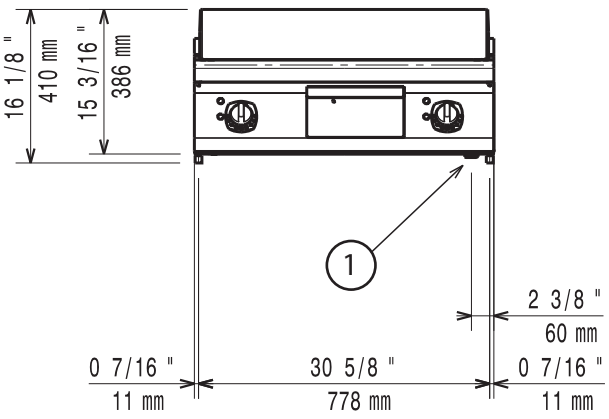

SIDE

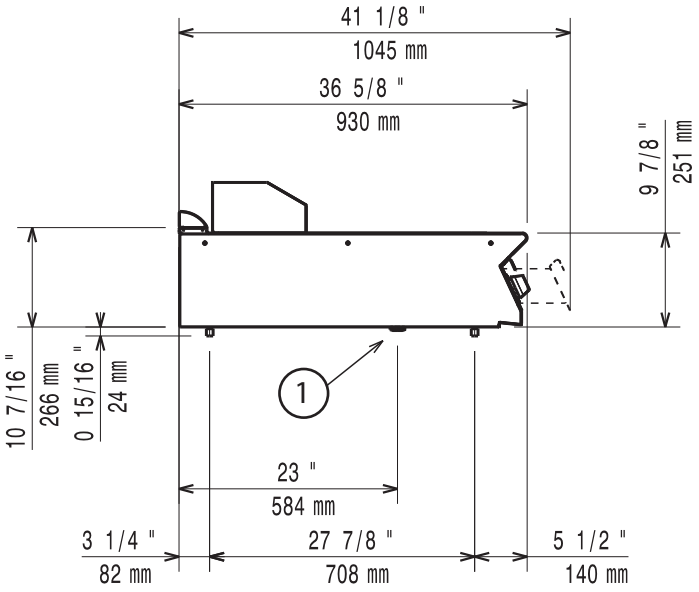

TOP

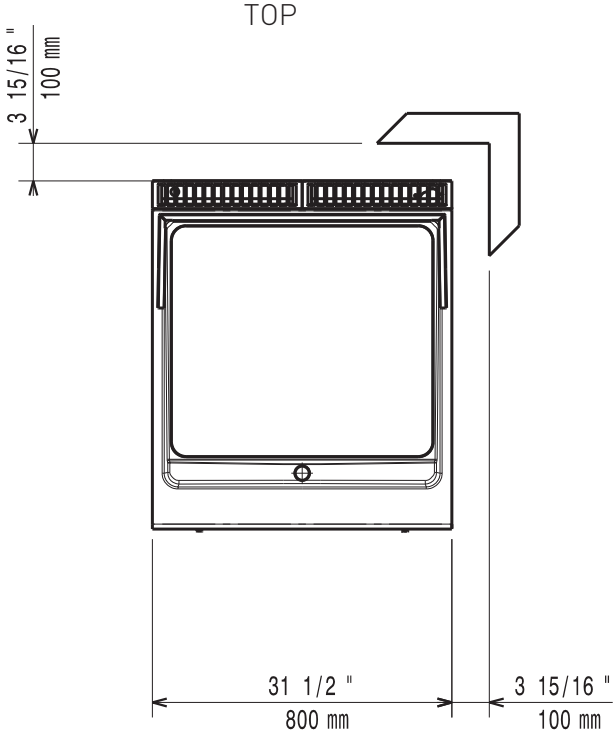

1. Electrical connection