

Griddle, Smooth/Ribbed, 800 mm

Model: E9IIMDAOMEA • Article no: 391358

Power supply: 400V 3Ph ~50/60Hz

The griddle perfectly cooks meat, fish, or vegetables by placing the food directly on the cooking surface. The top has a service duct to facilitate installation and can be mounted on tabletops or open base cupboards. It is a one-piece pressed 1.5 mm stainless steel worktop with smooth, rounded corners.

The cooking surface is in mild steel with a smooth/ribbed plate with a cooking plate of 15 mm thick special mild steel for even temperature distribution. The radiant heat allows thicker cuts of meat to be cooked perfectly—a safety thermostat with a temperature range adjustable from 120°C to 280°C. The rough brushed chrome surface is highly resistant to scratches and facilitates cleaning operations at the end of the day.

A removable splash guard in stainless steel covers the back and sides of the cooking surface and is dishwasher safe. The design of the control knobs and bezels guarantees against water infiltration. Exterior panels in stainless steel with Scotch Brite finish. Right-angled, laser-cut side edges for flush-fitting of units.

A full-length grease drainage channel and a large drain hole to drain excess grease and fat into a 1.5-liter grease collection drawer are on the front of the cooking surface. The grease collector drawer may be filled with water to facilitate cleaning.

MAIN FEATURES

- Surface 2/3 smooth and 1/3 ribbed in brushed chrome
- IPX5 water protection
- Fast heat-up time
- One piece pressed worktop in 1.5 mm stainless steel

E9IIMDAOMEA, 391358
9/30/2026 3:47 PM

Subject to change without notice.
For correct installation, refer to installation manual.

Technical data

Certifications & regulations

Certifications	CE
IP Class	X5

Dimensions & weight

Width, net (mm)	800
Depth, net (mm)	930
Height, net (mm)	250
Weight, net (kg)	105
Weight, gross (kg)	120

Electric

Voltage (V)	400
Phase	3
Has neutral	No
Frequency (Hz)	50, 60
Connection Cable, length (m)	0
Loading (kW)	15
Max Amps in Phase (A)	21.7
Plug type	None

Functions & appearance

Griddle/Grill, type	Chrome Plated, Ribbed, Smooth
Cooking surface, dimensions (mm)	730x700
Installation, type	Top Model
Noise level < (dB)	70
Range, type	Steel
Temperature, max (°C)	280

General data

Country of origin	Italy
Variant Model Number	E9IIMDAOMEA

Included in delivery

1 of Scraper for ribbed plate fry tops - kit includes knife blades for both smooth and ribbed surface (206420).

Loipart AB (HQ), **Sweden**
Tel: +46 313 920 100, loipart@loipart.com

LMG Finland Oy, **Finland**
Tel: +358 40 664 6680, lmg@lmg.fi

Loipart USA Inc., **USA**
Tel: +1 954 530 5276, loipartusa@loipart.com

Loipart SEA Pte Ltd, **Singapore**
Tel: +65 670 99 100, contact@loipart.sg

DIMENSIONS

FRONT

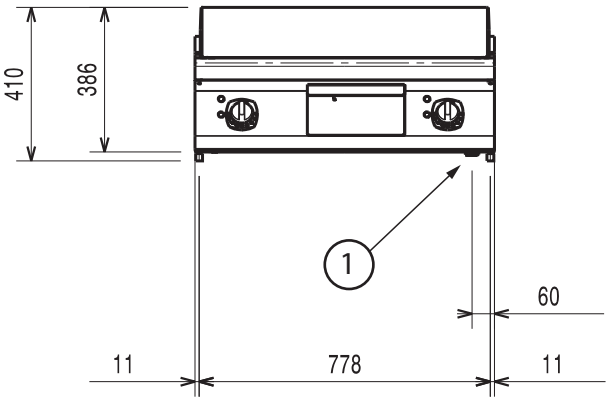

SIDE

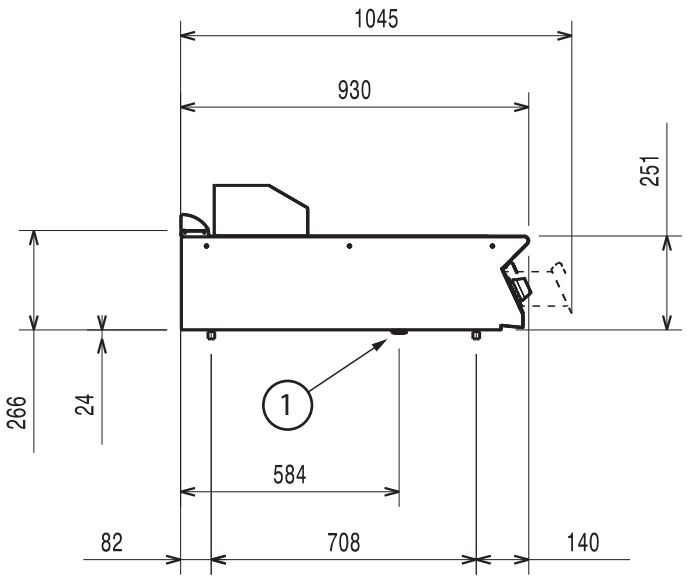

TOP

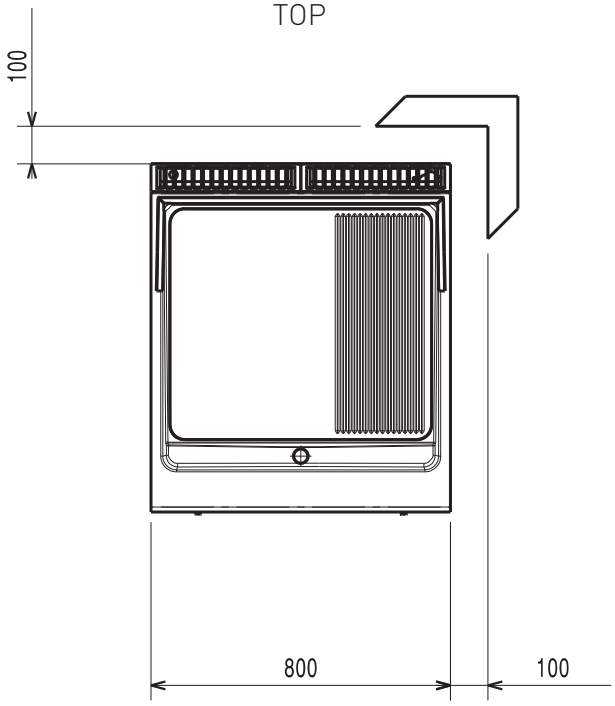

1. Electrical connection

Positioning of appliance

If appliance is set up or next to or against temperature sensitive furniture or similar, a safety gap of approximately 150 mm should be maintained or some form of heat insulation fitted.