

Griddle, Smooth/Ribbed, 800 mm

Model: E9IIMIAOMEA • Article no: 391359

Power supply: 230V 3Ph ~50/60Hz

This griddle in the 900XP range is designed to guarantee the highest level of performance, reliability, energy-saving, safety standards, and ergonomic operation. The cooking surface is 1/3 ribbed and 2/3 smooth brushed chrome that is highly resistant to scratches and facilitates cleaning at the end of the day. A large drain hole on the cooking surface permits the draining of fat into a large collector placed under the cooking surface. The model is to be mounted on open base cupboards, bridging supports, or cantilever systems.

The griddle has electric elements in Incoloy positioned under the cooking plate. It features separate controls for each half module of the cooking surface, a safety thermostat, and thermostatic control. The design of the control knob system guarantees against water infiltration. The temperature can be set from 120° up to 280°C. A high stainless steel splash guards on the rear and sides of the cooking surface that can be easily removed for cleaning and are dishwasher-safe.

Note: handrail is available as an optional extra.

MAIN FEATURES

- Smooth/ribbed cooking plate
- High level of performance and fast heat up time
- Safety thermostat and thermostatic control
- The unit is 930 mm deep to give a large working surface area
- Large drain hole for fat and grease
- Adjustable marine feet (50 mm)

E9IIMIAOMEA, 391359
9/30/2026 3:47 PM

Subject to change without notice.
For correct installation, refer to installation manual.

Technical data

Certifications & regulations

Certifications	CE
IP Class	X5

Dimensions & weight

Width, net (mm)	800
Depth, net (mm)	930
Height, net (mm)	250
Weight, net (kg)	105
Weight, gross (kg)	120

Electric

Voltage (V)	230
Phase	3
Has neutral	No
Frequency (Hz)	50, 60
Connection Cable, length (m)	0
Loading (kW)	15
Max Amps in Phase (A)	15
Plug type	None

Functions & appearance

Griddle/Grill, type	Chrome Plated, Ribbed, Smooth
Cooking surface, dimensions (mm)	730x700
Installation, type	Top Model
Noise level < (dB)	70
Range, type	Steel
Temperature, max (°C)	280

General data

Country of origin	Italy
Variant Model Number	E9IIMIAOMEA

Included in delivery

1 of Scraper for ribbed plate fry tops - kit includes knife blades for both smooth and ribbed surface (206420).

Loipart AB (HQ), **Sweden**
Tel: +46 313 920 100, loipart@loipart.com

LMG Finland Oy, **Finland**
Tel: +358 40 664 6680, lmg@lmg.fi

Loipart USA Inc., **USA**
Tel: +1 954 530 5276, loipartusa@loipart.com

Loipart SEA Pte Ltd, **Singapore**
Tel: +65 670 99 100, contact@loipart.sg

DIMENSIONS

FRONT

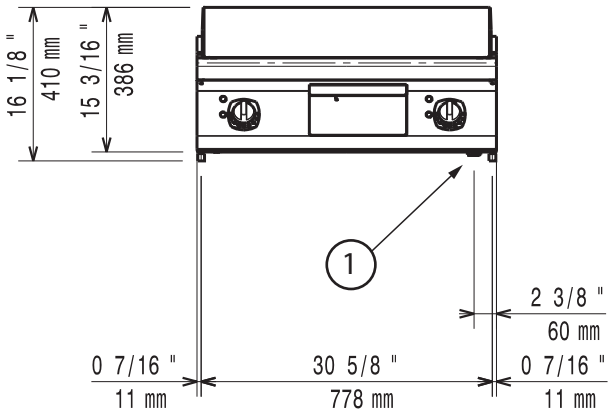

SIDE

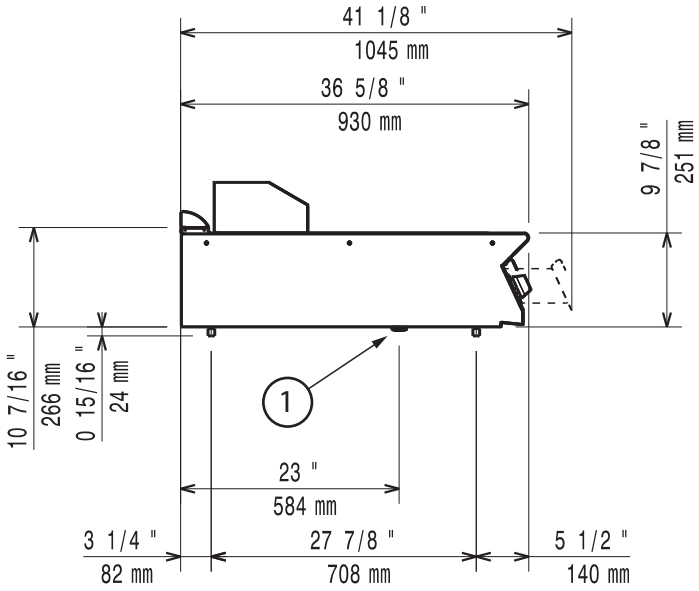

TOP

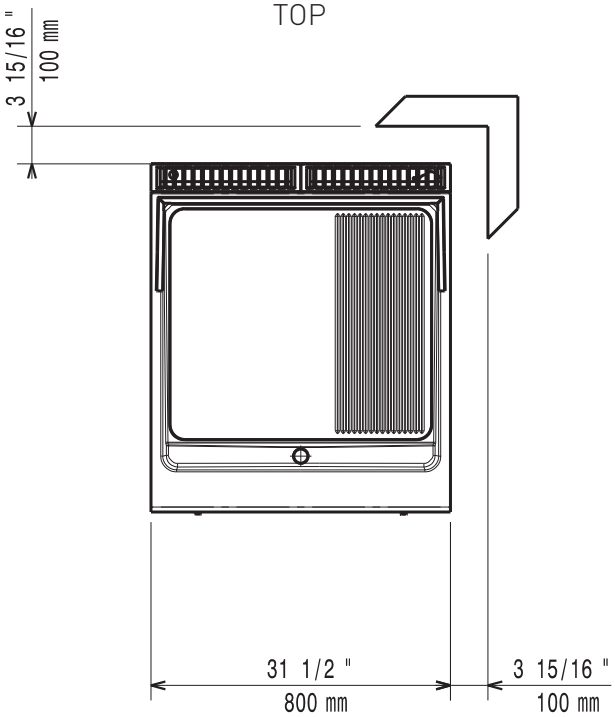

1. Electrical connection