

Boiling Pan 100 L

Model: EBE100 • Article no: S902800300

Power supply: 480V 3Ph ~50/60Hz

Electrolux boiling pans in the economy range are available in 4 sizes: 40, 60, 80, and 100 liters. The boiling pan is constructed in stainless steel, has motor tilting, and a comfortable working height of 900 mm. It is well insulated, and the outside temperature stays below 40°C. Installation can be made as twins, triples, or larger. A measuring stick is included in the delivery. The right-hand column/leg belongs to the respective boiling pan. In this column/leg, all technical parts are located, such as the control panel with continuous power control, the pilot lamp, the tilting motor with controls, and other components.

MAIN FEATURES

- Hygienic Design
- Well Insulated
- Electric Tilting
- Economical
- All Technical Components in Right Column
- High Enclosure Class IPX5

Subject to change without notice.
For correct installation, refer to installation manual.

Technical data

Certifications & regulations

Certifications	CE
IP Class	X5

Dimensions & weight

Width, net (mm)	1068
Depth, net (mm)	720
Height, net (mm)	900
Weight, net (kg)	118
Weight, gross (kg)	135
Volume, net (m3)	0.69
Volume, gross (m3)	0.9

Electric

Voltage (V)	480
Phase	3
Has neutral	No
Frequency (Hz)	50, 60
Fuse (A)	25
Loading (kW)	15.3
Max Amps in Phase (A)	19

Functions & appearance

Capacity (L)	100
Installation, type	Floor Model
Noise level < (dB)	70
Temperature, max (°C)	118
Tilting, type	Electric

General data

Country of origin	Sweden
Heat Emission (kW)	5.36
Variant Model Number	EBE100

Water

Cold water inlet, diameter (")	1/2

Loipart AB (HQ), **Sweden**
Tel: +46 313 920 100, loipart@loipart.com

LMG Finland Oy, **Finland**
Tel: +358 40 664 6680, lmg@lmg.fi

Loipart USA Inc., **USA**
Tel: +1 954 530 5276, loipartusa@loipart.com

Loipart SEA Pte Ltd, **Singapore**
Tel: +65 670 99 100, contact@loipart.sg

Hot water inlet, diameter (")	1/2
Pressure, max (Bar)	0.45
Water pressure, max (Bar)	10

Included in delivery

1 measure stick

Loipart AB (HQ), **Sweden**
Tel: +46 313 920 100, loipart@loipart.com

LMG Finland Oy, **Finland**
Tel: +358 40 664 6680, lmg@lmg.fi

Loipart USA Inc., **USA**
Tel: +1 954 530 5276, loipartusa@loipart.com

Loipart SEA Pte Ltd, **Singapore**
Tel: +65 670 99 100, contact@loipart.sg

DIMENSIONS

NOTE:
One left column/leg is required for every set of boiling pan or pans.

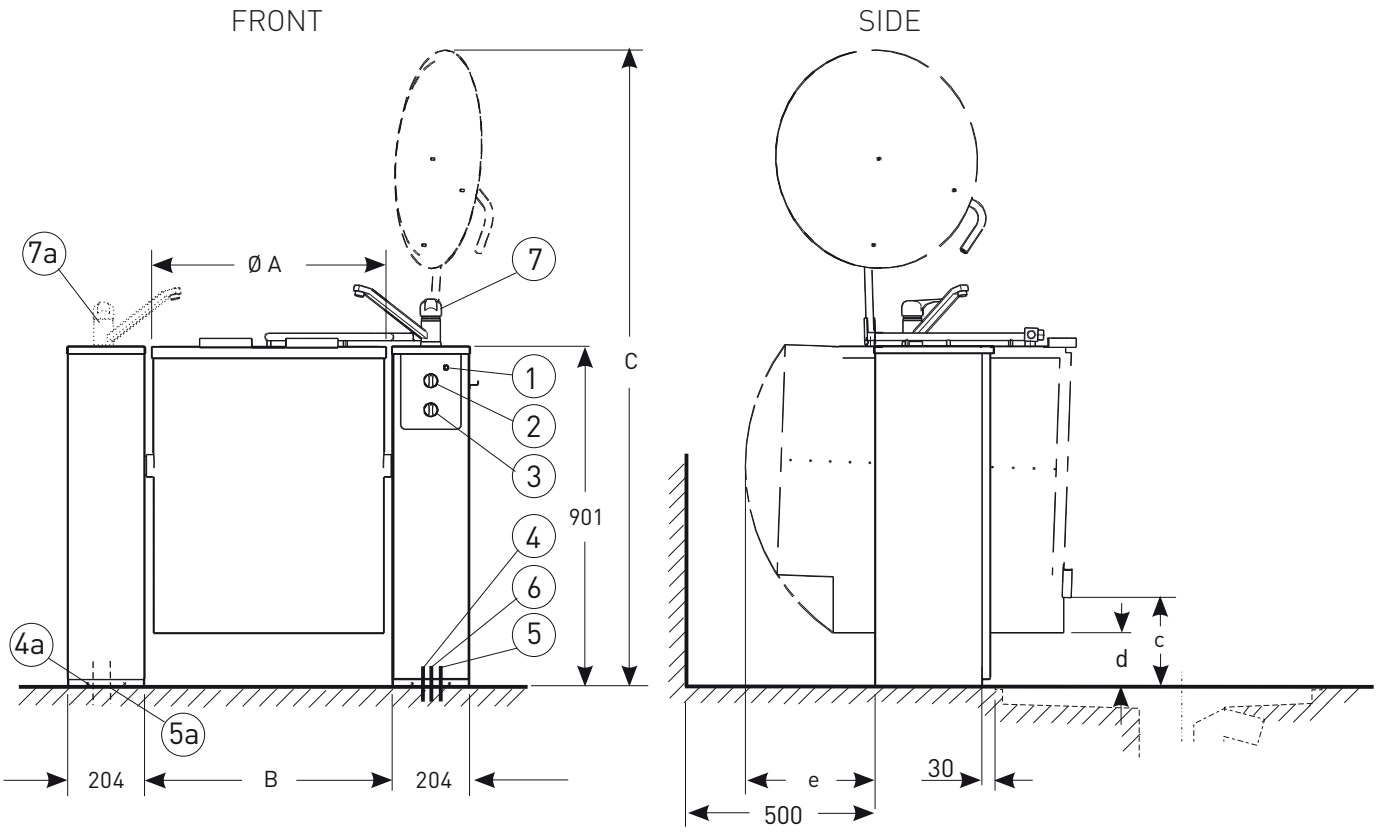

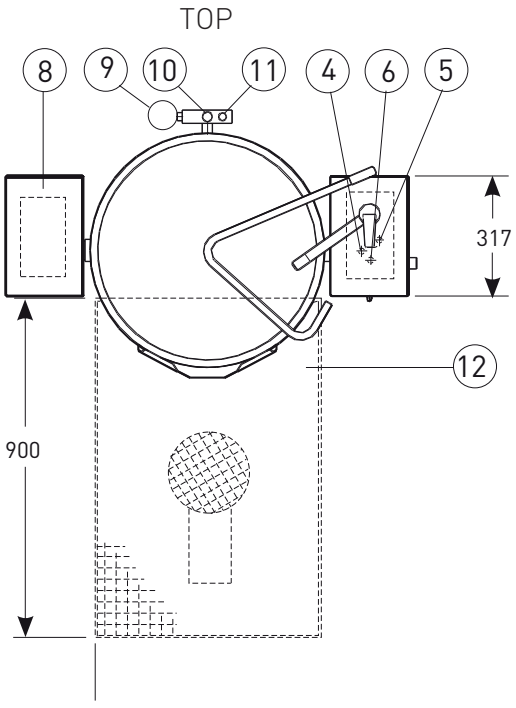

1. Pilot lamp
2. Variable heat regulator power control
3. Tilting
4. Hot water connection, DN15 (G1/2") *
5. Cold water connection, DN15 (G1/2") *
6. Electrical connection
7. Mixing battery for hot and cold water, pipe outer diameter Ø10 mm
8. Left column/leg (see optional extras)
9. Steam trap
10. Safety valve
11. Vacuum valve
12. Floor drain, optional extra (not delivered by Loipart)

Dimensions (mm)

A	B	C	c	d	e
620	660	1690	240	75	350

8a. Left column prepared
for mixing battery (optional extra) - installation:

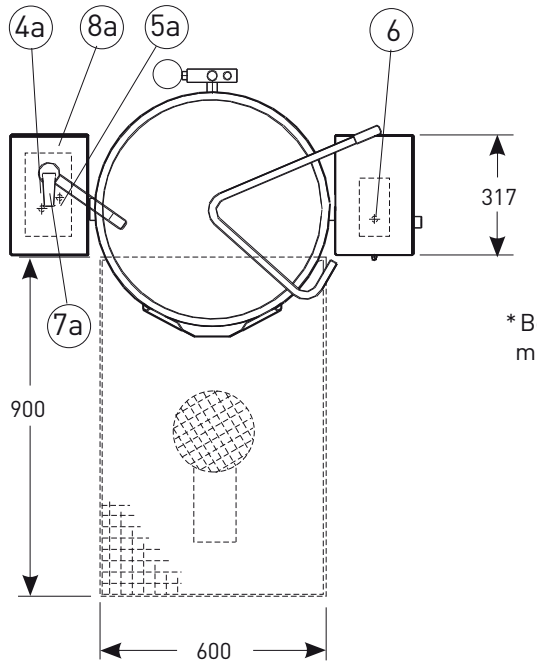

4a. Incoming HW feed, recommended conn. No 15*
5a. Incoming CW feed, recommended conn. No 15*
6. Electrical connection
7a. Mixing battery for hot and cold water, pipe outer diameter Ø10 mm
8a. Left column/leg prepared for mixing battery (see optional extras)

* Before connection to the mixing battery an on/off and non-return valve must be fitted on the incoming water feeds (not delivered by Loipart).

MARINE INSTALLATION

(RECOMMENDATIONS SINGLE PAN INSTALLATION)

The pan can either be bolted or welded to deck/foundation. We recommend that the foundation is raised at approx. 5-10 mm over the finished deck-covering to avoid penetration of water into the columns.

Example of installation of single boiling pan:

BOLTING:Level and position the boiling pan to be bolted to the deck. A fixture withpre-drilled holes is available as optional extra and necessary for locating theinstallation frames.

WELDING:Level and position the boiling pan and weld it to the deck. Installation framescan be used.

MULTIPLE STAND:Bolting as twins, triples etc requires additional installation frames for eachcolumn and one extra fixture for each boiling pan added.The fixture isnecessary to mark out the exact position of the bolting holes for installationof the installation frames.