

Baking and Roasting Oven, 2-Deck With Stand

Model: EO21-2 • Article no: L23032

Power supply: 440V 3Ph ~50/60Hz

A professional electric static oven with two chambers for baking various foods, including meats, vegetables, and other dishes.

The upper and lower thermostats can be set to 300 °C, and each chamber includes two pairs of stainless-steel runners and a GN2/1 grid.

The internal dimensions of the oven chamber are 540 mm (width) x 710 mm (depth).

MAIN FEATURES

- Static oven type
- Comes with a stand and marine feet

Subject to change without notice.
For correct installation, refer to installation manual.

Technical data

Certifications & regulations

Certifications	CE
IP Class	44

Dimensions & weight

Width, net (mm)	800
Depth, net (mm)	800
Height, net (mm)	1693
Weight, net (kg)	150
Weight, gross (kg)	180

Electric

Voltage (V)	440
Phase	3
Has neutral	No
Frequency (Hz)	50, 60
Connection Cable, length (m)	0
Loading (kW)	12
Max Amps in Phase (A)	16
Plug type	None

Functions & appearance

Baking decks (pcs)	2
Capacity, pans (pcs)	4
Marine feet	Yes
Installation, type	Floor Model
Oven, type	Static

General data

Country of origin	Bulgaria
Variant Model Number	EO21-2

Included in delivery

The oven comes with a stand, marine feet, and 2 pcs S/S grids.

Loipart AB (HQ), **Sweden**
Tel: +46 313 920 100, loipart@loipart.com

LMG Finland Oy, **Finland**
Tel: +358 40 664 6680, lmg@lmg.fi

Loipart USA Inc., **USA**
Tel: +1 954 530 5276, loipartusa@loipart.com

Loipart SEA Pte Ltd, **Singapore**
Tel: +65 670 99 100, contact@loipart.sg

FRONT

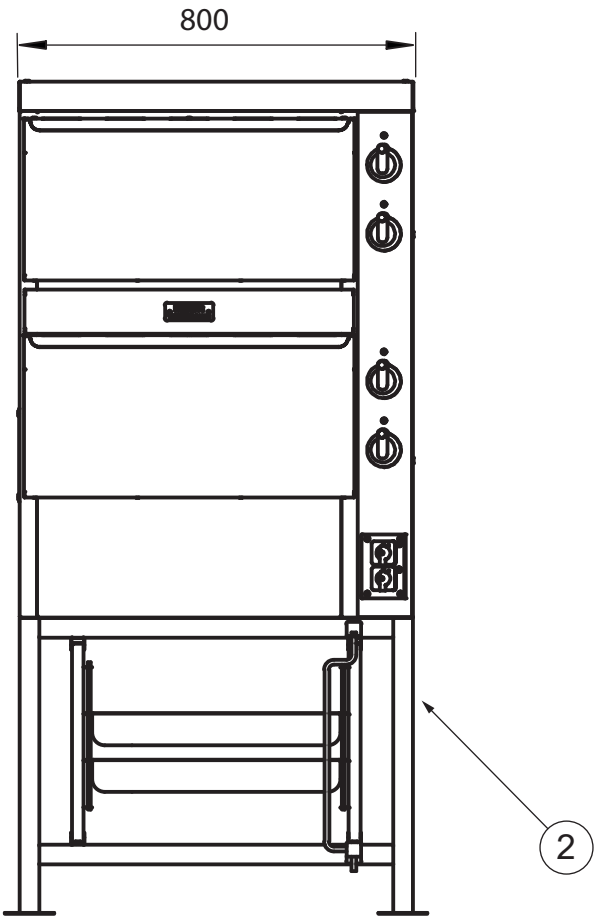

SIDE

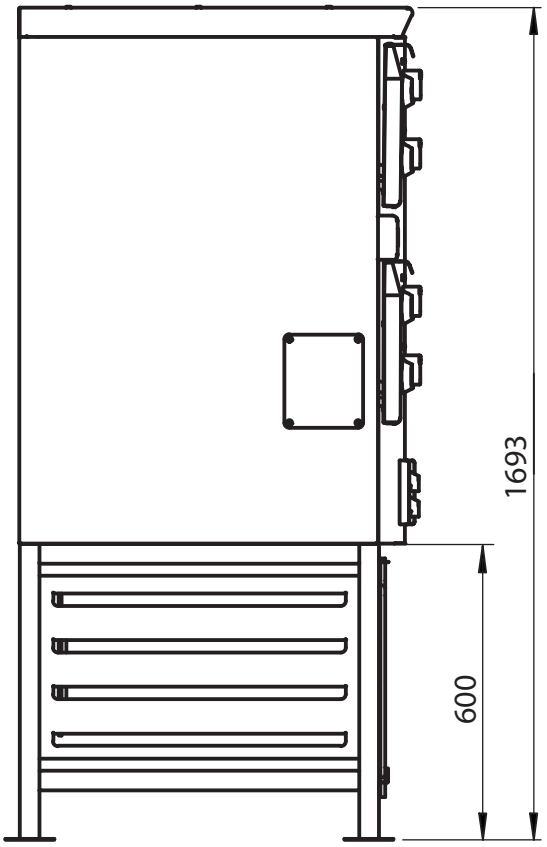

TOP

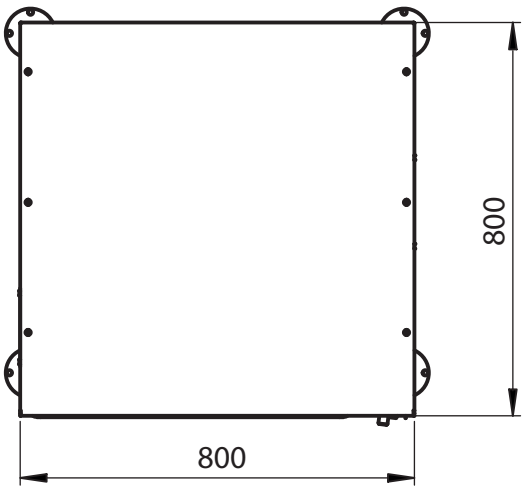

BOTTOM

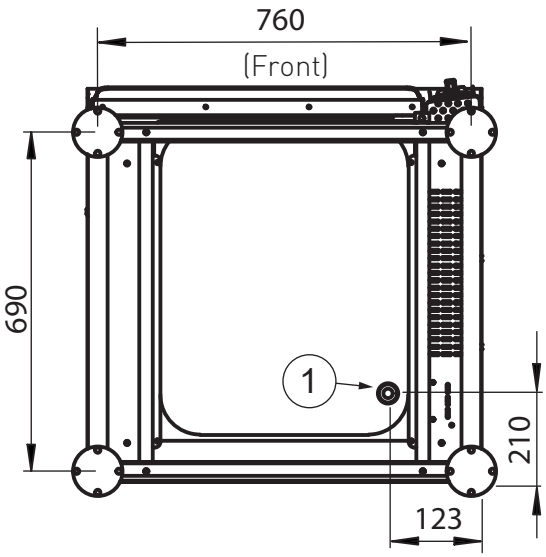

1. Electrical connection
2. Stand with marine feet for 4 pcs of GN 2/1 pans

LOIPART

DIMENSIONS

DETAIL MARINE FOOT

