

Deep Fat Fryer 2x7-8L with 2 basket lifts & pump

Model: EVO-2200M • Article no: 8410MLP

Power supply: 400V 3Ph ~50Hz

This fryer is made entirely in stainless steel with very strong, 1.5 mm thick, seamless, pressed stainless steel oil tank. It is tested to satisfy the heavy use and demanding safety standards required at sea. The fryer is provided with an improved security system thanks to the deactivation of the fryer when opening the tap and when washing the heating element. The rounded edges and corners, and the hinged construction of the stainless steel heating elements facilitate cleaning.
The drain with a cold zone for waste recovery is located in the cabinet and provided with a ball type drain valve with a security lock.
The thermostat probe is fixed to the heating element which means quick response and precise temperature control. Using a "standby mode" reduces automatically oil temperature saving both oil and electricity.
As to Solas rules the client can choose to use the connection points directly in the unit or use the separate 4-wire Solas security cord delivered with the machine.
An automatic basket lift and a recycling pump with micro-filter are available as optional extras.

MAIN FEATURES

- High Output
- Exelent Frying Results
- Energy And Oil Saving
- Insulated Execution
- Precise Temperature Control
- Easy To Clean
- Protection Class Ipx5
- Manufactured Acc. To Solas Recommendations

EVO-2200M, 8410MLP
9/30/2026 3:45 PM

Subject to change without notice.
For correct installation, refer to installation manual.

Technical data

Certifications & regulations

In complience with SOLAS	Yes

Dimensions & weight

Width, net (mm)	400
Depth, net (mm)	600
Height, net (mm)	900
Weight, net (kg)	58
Weight, gross (kg)	62
Volume, net (m3)	0.22

Electric

Voltage (V)	400
Phase	3
Has neutral	No
Frequency (Hz)	50
Loading (kW)	14.4

Functions & appearance

Capacity (L)	8
Frying capacity, chips (kg/h)	46
Marine feet	Yes
Installation, type	Floor Model
Noise level < (dB)	70

General data

Country of origin	Switzerland
Variant Model Number	EVO-2200M

Included in delivery

Lid, frying basket and oil bucket with filter.

Loipart AB (HQ), **Sweden**
Tel: +46 313 920 100, loipart@loipart.com

LMG Finland Oy, **Finland**
Tel: +358 40 664 6680, lmg@lmg.fi

Loipart USA Inc., **USA**
Tel: +1 954 530 5276, loipartusa@loipart.com

Loipart SEA Pte Ltd, **Singapore**
Tel: +65 670 99 100, contact@loipart.sg

DIMENSIONS

FRONT

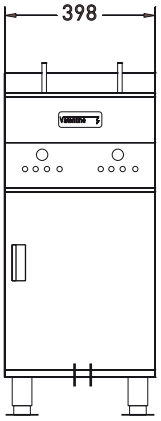

SIDE

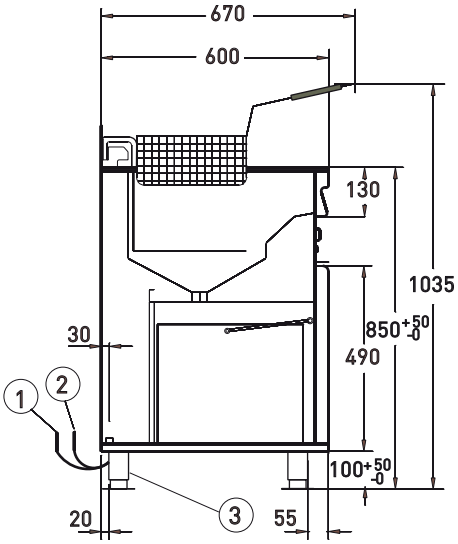

TOP

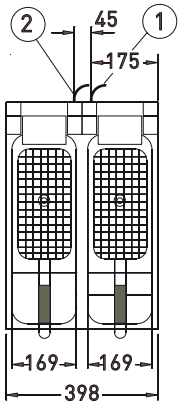

1. Electrical connection, 2 m cable without plug
2. Solas security connection - 2 m electric cord without plug
3. Marine leg, see detail drawing

BOTTOM

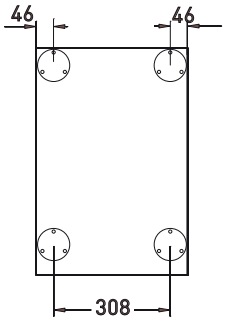

DETAIL MARINE FEET

adjustable in 50 mm steps:

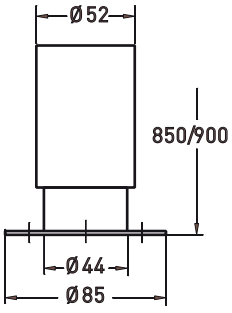

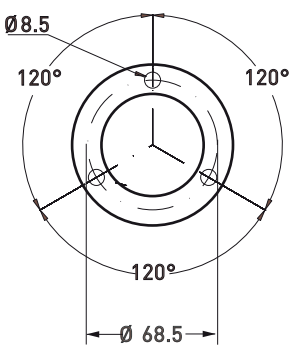

BASKET

