

Deep Fat Fryer 1X25-28 L

Model: EVO-600MP • Article no: 8454MP

Power supply: 440V 3Ph ~50/60Hz

This fryer is made entirely in stainless steel with a solid, 1.5 mm thick, seamless, pressed stainless steel oil tank. The fryer is tested to satisfy the heavy use and demanding safety standards required at sea. The model has an improved security system that deactivates the fryer if anyone opens the tap and wash the heating element.

The rounded edges and corners of the fryer and the hinged construction of the stainless steel heating elements facilitate cleaning. The drain with a cold zone for waste recovery is located in the cabinet and provided with a ball-type drain valve with a security lock.

The thermostat probe is fixed to the heating element, which means quick response and precise temperature control. Using a "standby mode" automatically reduces oil temperature, saving both oil and electricity.

As to Solas rules, the client can choose to use the connection points directly in the unit or use the separate 4-wire Sola's security cord delivered with the machine.

An automatic basket lift is available as optional extras.

MAIN FEATURES

- Filter pump
- High Output
- Excellent Frying Results
- Energy And Oil Saving
- Insulated Execution
- Precise Temperature Control
- Easy To Clean
- Protection Class IPX5
- Manufactured Acc. To Solas Recommendations

EVO-600MP, 8454MP
9/30/2026 3:44 PM

Subject to change without notice.
For correct installation, refer to installation manual.

Technical data

Certifications & regulations

IP Class	X5
In complience with SOLAS	Yes

Dimensions & weight

Width, net (mm)	600
Depth, net (mm)	600
Height, net (mm)	900
Weight, net (kg)	75
Weight, gross (kg)	79
Volume, net (m3)	0.32
Volume, gross (m3)	0.42

Electric

Voltage (V)	440
Phase	3
Has neutral	No
Frequency (Hz)	50, 60
Loading (kW)	21.6

Functions & appearance

Capacity (L)	28
Frying capacity, chips (kg/h)	68
Marine feet	Yes
Installation, type	Floor Model
Noise level < (dB)	70

General data

Country of origin	Switzerland
Variant Model Number	EVO-600MP

Included in delivery

Lid, frying basket, and oil bucket with filter.

Loipart AB (HQ), **Sweden**
Tel: +46 313 920 100, loipart@loipart.com

LMG Finland Oy, **Finland**
Tel: +358 40 664 6680, lmg@lmg.fi

Loipart USA Inc., **USA**
Tel: +1 954 530 5276, loipartusa@loipart.com

Loipart SEA Pte Ltd, **Singapore**
Tel: +65 670 99 100, contact@loipart.sg

DIMENSIONS

FRONT

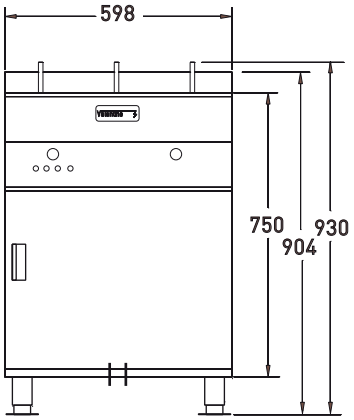

SIDE

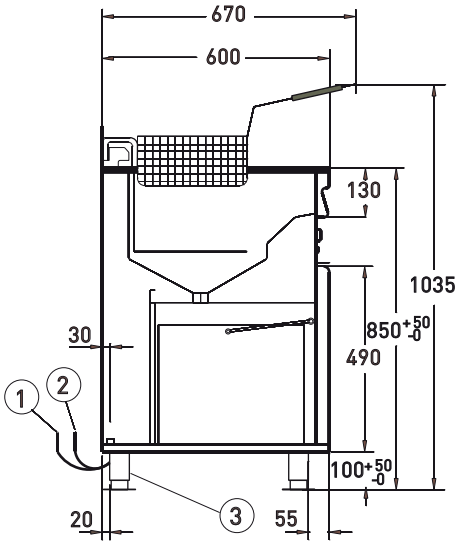

TOP

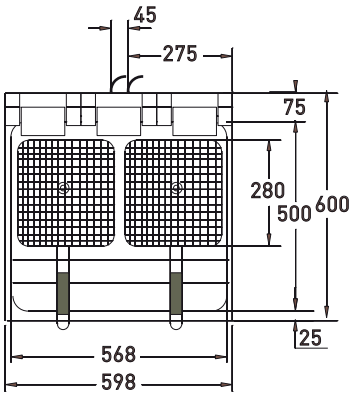

1. Electrical connection, 2 m cable without plug
2. Solas security connection - 2 m electric cord without plug
3. Marine leg, see detail drawing

DETAIL MARINE FEET

adjustable in 50 mm steps:

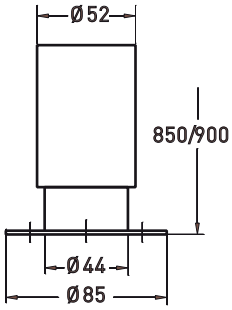

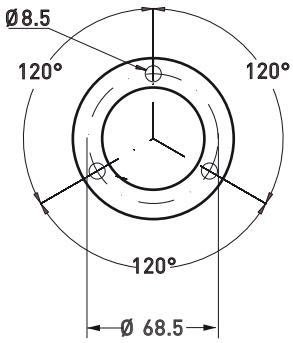

BASKET

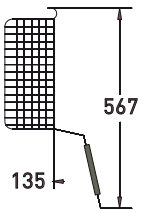

BOTTOM

