

Rice Cooker 13 L

Model: Exxent • Article no: 90065

Power supply: 230V 1Ph ~50Hz

The electric rice cooker is a powerful and full-featured rice cooker designed and built for commercial use. With cook and heat preservation functions, this model offers automatic shut-off and hold when done.
Press the switch button, and the red pilot lamp will let you know the unit is cooking. The cooker is provided with a magnetic thermal limiter located in the middle of the heater plate for better cooking control. It senses when the water has been absorbed, ending the cooking cycle before the rice can burn. When the rice is finished, the switch button is automatically released, and the pilot lamp will turn yellow. Keep the lid on for 10 more minutes to ensure the rice is thoroughly cooked.
The temperature of the rice will be automatically kept within the range of 60-80 °C.
When the rice's temperature has fallen below that point, the pilot lamp will begin to flash, indicating that the heat preservation unit has been set to work.
The rice cooker comes with a measuring cup, a rice scoop, and a 1.3 m electrical cord with an earthed plug.

MAIN FEATURES

- Commercial-grade electric rice cooker with cooking and heat preservation functions
- Automatic shut-off and keep-warm feature
- Magnetic thermal limiter ensures rice doesn’t burn by detecting water absorption
- Auto switch release when rice is done
- Maintains rice temperature between 60–80 °C
- Flashing the pilot lamp signals heat preservation mode when the temperature drops

Exxent, 90065
9/30/2026 3:35 PM

Subject to change without notice.
For correct installation, refer to installation manual.

Technical data

Certifications & regulations

IP Class	21

Dimensions & weight

Width, net (mm)	450
Depth, net (mm)	400
Height, net (mm)	360
Weight, net (kg)	6.3
Weight, gross (kg)	7.6
Volume, net (m3)	0.07
Volume, gross (m3)	0.09

Electric

Voltage (V)	230
Phase	1
Has neutral	No
Frequency (Hz)	50
Connection Cable, length (m)	1.3
Fuse (A)	10
Loading (kW)	1.95
Plug type	Schuko

Functions & appearance

Capacity (L)	13

General data

Country of origin	China
Heat Emission (kW)	0.7
Variant Model Number	Exxent

Other information

Unit works on 50hz and 60hz. Data plate shows only 50hz.

Included in delivery

Includes a measuring cup and rice scoop.

Loipart AB (HQ), **Sweden**
Tel: +46 313 920 100, loipart@loipart.com

LMG Finland Oy, **Finland**
Tel: +358 40 664 6680, lmg@lmg.fi

Loipart USA Inc., **USA**
Tel: +1 954 530 5276, loipartusa@loipart.com

Loipart SEA Pte Ltd, **Singapore**
Tel: +65 670 99 100, contact@loipart.sg

DIMENSIONS

FRONT

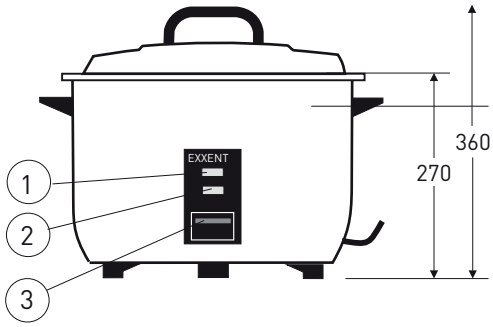

1. Pilot lamp COOKING
2. Pilot lamp WARMING
3. Switch
4. Electrical connection,1.3 m long cord with Schuko plug

TOP

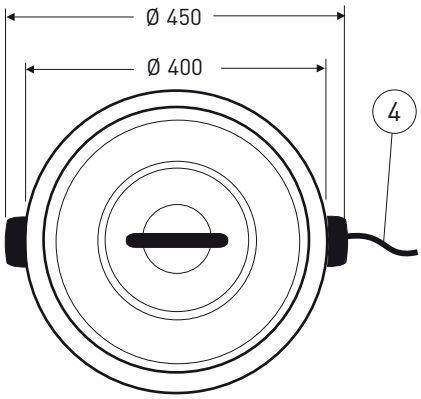

MARINE INSTALLATION

The rice cooker is a loose table item with three plastic feet. Use angle bars (not included) or other suitable arrangement to keep the unit from moving on the table top due to ship's movements in the sea.

