

Range, 6 Hot Plates

Model: FKP6090M • Article no: FRB702217002M

Power supply: 440V 3Ph ~50/60Hz

Range with six cast-iron 400x400 mm hotplates carefully mounted and balanced to form a flat surface. A large pan can be placed over several hotplates while providing full contact. The range is easy to use and clean. It is a safe and effective cooker with a high heating effect for rapid warming.

The FKP cookers are entirely stainless steel with durable hotplates suitable for extended use.

MAIN FEATURES

- Hygienic
- Fixed 3,8kW per hotplate
- Removable drip pan
- Bottom shelf
- Easy-to-service

FKP6090M, FRB702217002M
9/30/2026 3:41 PM

Subject to change without notice.
For correct installation, refer to installation manual.

Technical data

Certifications & regulations

Certifications	CE

Dimensions & weight

Width, net (mm)	1254
Depth, net (mm)	854
Height, net (mm)	900
Weight, net (kg)	160
Weight, gross (kg)	200
Volume, net (m3)	0.98
Volume, gross (m3)	1.28

Electric

Voltage (V)	440
Phase	3
Has neutral	No
Frequency (Hz)	50, 60
Fuse (A)	20
Loading (kW)	22.8
Plug type	None

Functions & appearance

Cast iron pan	Yes
Marine feet	Yes
Hot plate dimensions (mm)	400x400
Hot plate, qty (pcs)	4
Hot plate, type	Square
Installation, type	Floor Model
Range, type	Cast Iron

General data

Country of origin	Sweden
Variant Model Number	FKP6090M

Included in delivery

Rolling rack and front hand rail.

Loipart AB (HQ), **Sweden**
Tel: +46 313 920 100, loipart@loipart.com

LMG Finland Oy, **Finland**
Tel: +358 40 664 6680, lmg@lmg.fi

Loipart USA Inc., **USA**
Tel: +1 954 530 5276, loipartusa@loipart.com

Loipart SEA Pte Ltd, **Singapore**
Tel: +65 670 99 100, contact@loipart.sg

DIMENSIONS

FRONT

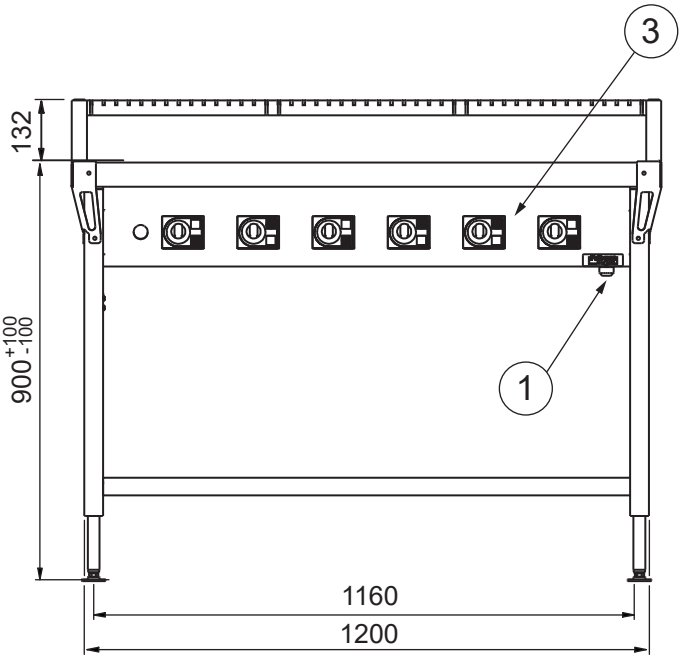

SIDE

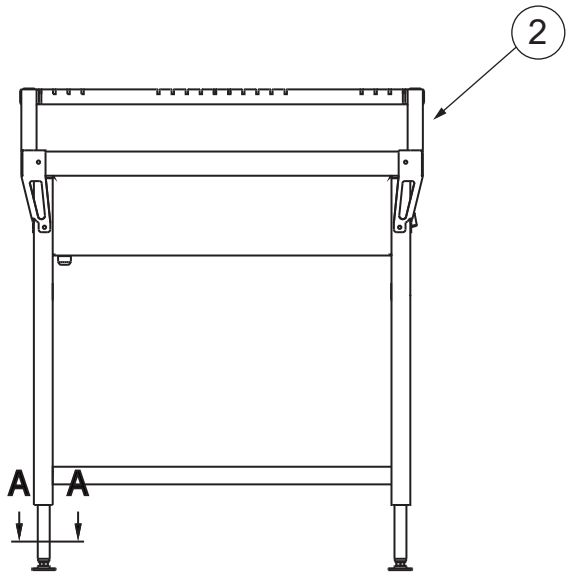

TOP

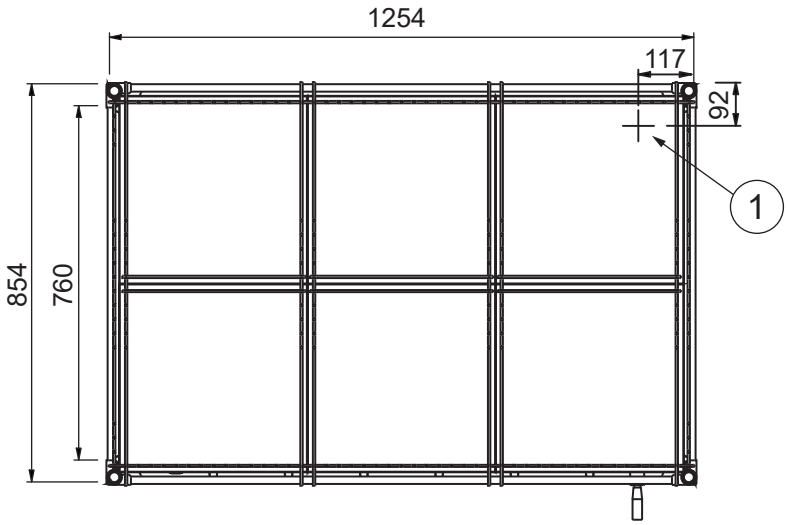

BACK

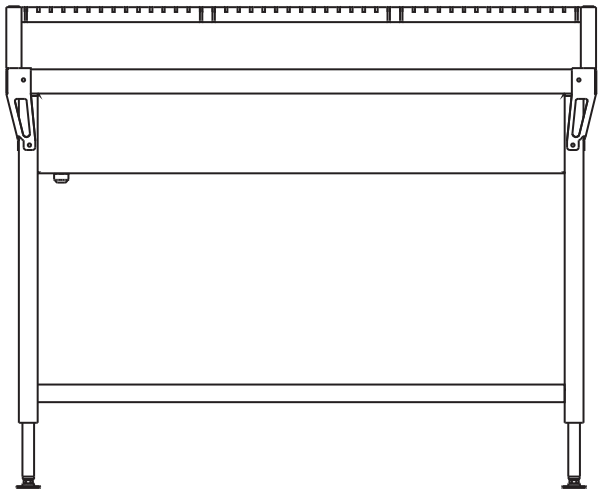

DETAIL MARINE FEET

A-A

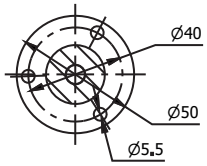

1. Electrical connection
2. Rolling racks
3. Control panel

LOIPART