

Range, 4 Hot Plates

Model: FS4090M-4 • Article no: FRB702278002M

Power supply: 440V 3Ph ~60Hz

The range is made entirely in stainless steel with semi-polished Scotch Brite finish. It is equipped with 4 cooking plates made of cast iron controlled by 3-step switches. Control switches and pilot lamps indicating their actions are located on the front panel.
Hot plates are carefully mounted and balanced to form a completely flat hob surface. Large pots and pans can be placed over several hotplates at the same time providing full contact.
The range is provided with marine feet for bolting or welding to the deck. Installation and service are carried out at the front of the range.

MAIN FEATURES

- Stainless steel execution
- Hygienic design
- Powerful with high capacity
- Removable drip pan
- IP54 water protection class
- Easy to maintain

Subject to change without notice.
For correct installation, refer to installation manual.

Technical data

Certifications & regulations

Certifications	CE
IP Class	54

Dimensions & weight

Width, net (mm)	800
Depth, net (mm)	770
Height, net (mm)	900
Weight, net (kg)	85
Weight, gross (kg)	105
Volume, net (m3)	0.55
Volume, gross (m3)	0.72

Electric

Voltage (V)	440
Phase	3
Has neutral	No
Frequency (Hz)	60
Fuse (A)	20
Loading (kW)	16
Plug type	None

Functions & appearance

Cast iron pan	Yes
Marine feet	Yes
Hot plate dimensions (mm)	300X300
Hot plate, qty (pcs)	4
Hot plate, type	Square
Installation, type	Floor Model
Range, type	Cast Iron

General data

Country of origin	Sweden
Variant Model Number	FS4090M-4

Included in delivery

Loipart AB (HQ), **Sweden**
Tel: +46 313 920 100, loipart@loipart.com

LMG Finland Oy, **Finland**
Tel: +358 40 664 6680, lmg@lmg.fi

Loipart USA Inc., **USA**
Tel: +1 954 530 5276, loipartusa@loipart.com

Loipart SEA Pte Ltd, **Singapore**
Tel: +65 670 99 100, contact@loipart.sg

Rolling rack and front hand rail.

Loipart AB (HQ), **Sweden**
Tel: +46 313 920 100, loipart@loipart.com

LMG Finland Oy, **Finland**
Tel: +358 40 664 6680, lmg@lmg.fi

Loipart USA Inc., **USA**
Tel: +1 954 530 5276, loipartusa@loipart.com

Loipart SEA Pte Ltd, **Singapore**
Tel: +65 670 99 100, contact@loipart.sg

DIMENSIONS

FRONT

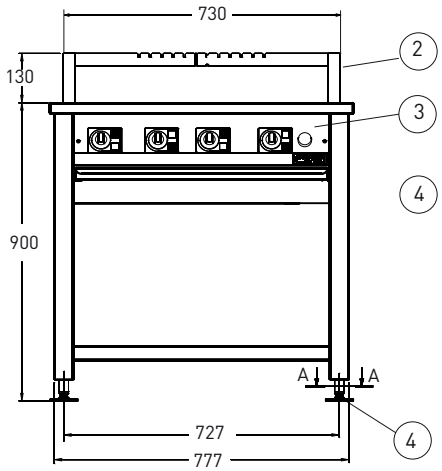

SIDE

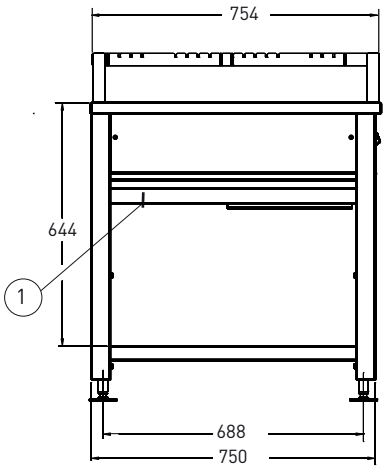

TOP

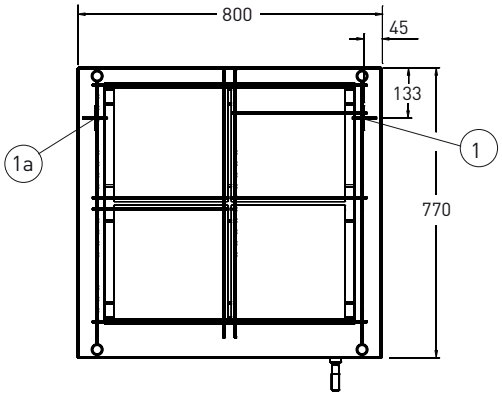

1 Electrical connection
1a. Alternative electrical connection
2. Rolling rack, optional extra
3. Control panel
4. Marine legs

DETAIL MARINE FEET

Section A-A

