

Infrared Food Warmer

Model: GRH96SS • Article no: GRH96SS

Power supply: 230V 1Ph ~50-60Hz

This infrared food warmer keeps all food at the proper serving temperatures using Glo-Ray's pre-focused heat patterns. This pattern prevents foods from being overcooked in the middle and cooling off around the edges by concentrating higher temperatures to the outer edges of holding surfaces where heat loss is the greatest. The food warmer ensures maximum flavour and minimises the risk of food-borne illness. Foods do not dry out or become discoloured; even the most delicate dishes hold that "just prepared" look.
The housing of stainless steel is durable and eliminates the danger of sagging.
The food warmer is delivered factory-assembled, ready to install. It can be installed side by side to create a warming area of any length. A pair of marine brackets for installation is included in delivery.

MAIN FEATURES

- Sturdy stainless steel housing
- Pre-focused heat
- Metal sheathed elements
- Easy to install

GRH96SS, GRH96SS
9/30/2026 3:50 PM

Subject to change without notice.
For correct installation, refer to installation manual.

Technical data

Certifications & regulations

USPH	Yes

Dimensions & weight

Width, net (mm)	2438
Depth, net (mm)	152
Height, net (mm)	70
Weight, net (kg)	10
Weight, gross (kg)	11
Volume, net (m3)	0.04
Volume, gross (m3)	0.05

Electric

Voltage (V)	230
Phase	1
Has neutral	No
Frequency (Hz)	50-60
Loading (kW)	2.4

General data

Country of origin	United States
Variant Model Number	GRH96SS

Included in delivery

2 angle brackets

Loipart AB (HQ), **Sweden**
Tel: +46 313 920 100, loipart@loipart.com

LMG Finland Oy, **Finland**
Tel: +358 40 664 6680, lmg@lmg.fi

Loipart USA Inc., **USA**
Tel: +1 954 530 5276, loipartusa@loipart.com

Loipart SEA Pte Ltd, **Singapore**
Tel: +65 670 99 100, contact@loipart.sg

DIMENSIONS

FRONT

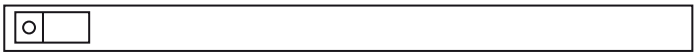

SIDE

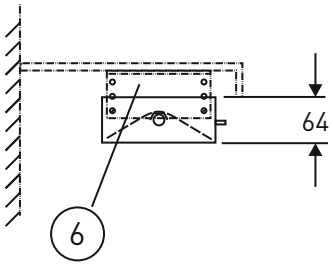

TOP

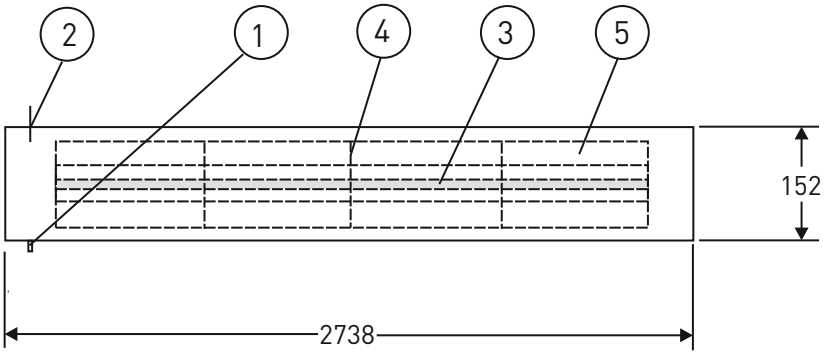

1. Electrical connection
2. Switch ON/OFF
3. Heating element
4. Protective grill
5. Reflector
6. Angle brackets
   (allowing vertical adjustment)

Installation:
Food warmers should be positioned min. 10" (250 mm) above flammable surface.
An air gap of min. 1 1/2" (4 mm) must be provided between the top side of the warmer and the bottom side of the shelf it is being attached to.
A pair of angle brackets(included)for mounting of food warmers under a shelf create an air space between the warmer and the shelf for extending warmer life.
Further information see "Installation and operating Manual".

Width of the heat pattern*
(depending on the height):

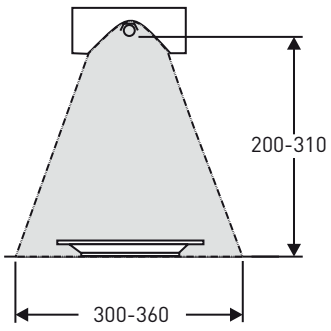

* application without base heat, based on ideal conditions