

Range, 4 Hot Plates With Oven, 800 mm

Model: L7ECMH4QE5 • Article no: 373151

Power supply: 440V 3Ph ~50/60Hz

The L700 range guarantees the highest performance, reliability, energy saving, safety standards, and ergonomic operation.

The freestanding ranges and boiling tops are ideal for galleys needing a flexible, powerful, and easy-to-clean cooking top mounted on an electric oven. Main connections are accessible from below the base of the unit, and all components can be accessed from the front.

The top is made of 1,5 mm stainless steel pressed in one piece with smooth, rounded corners. The exterior panels are stainless steel with a Scotch Brite finish. The four cast iron hot plates each have a power of 2.6 kW.

The oven has a recessed, double-skinned, insulated door for airtight closure and better hygiene. The oven cavity is stainless steel with a vitreous enameled ribbed base plate to allow for the direct placement of pans. The oven has separate thermostats for the top and bottom elements and has a power of 6 kW. Inside the oven are three levels of runners to accommodate 2/1 GN shelves.

MAIN FEATURES

- Four 2.6kW cast-iron square plates
- Stainless steel oven chamber with 3 levels of runners for 2/1 GN shelves
- Ribbed enameled steel oven base plate.
- 6 kW oven with thermostat adjustable from 100 °C to 300 °C.
- IPX 4 water protection.
- All exterior panels in Stainless Steel

L7ECMH4QE5, 373151
9/30/2026 3:41 PM

Subject to change without notice.
For correct installation, refer to installation manual.

Technical data

Certifications & regulations

Certifications	CE
IP Class	X4

Dimensions & weight

Width, net (mm)	800
Depth, net (mm)	730
Height, net (mm)	850
Weight, net (kg)	80
Weight, gross (kg)	100
Volume, net (m3)	0.5
Volume, gross (m3)	0.84

Electric

Voltage (V)	440
Phase	3
Has neutral	No
Frequency (Hz)	50, 60
Connection Cable, length (m)	0
Loading (kW)	16.4
Max Amps in Phase (A)	24
Plug type	None

Functions & appearance

Oven, included	Yes
Pan sizes	GN 2/1
Capacity, pans (pcs)	3
Marine feet	Yes
Hot plate dimensions (mm)	230X230
Hot plate, qty (pcs)	4
Hot plate, type	Square
Installation, type	Floor Model
Noise level < (dB)	70
Oven, type	Static
Range, type	Cast Iron

Temperature, max (°C)	300

General data

Country of origin	Italy
Variant Model Number	L7ECMH4QE5

Other information
test

Included in delivery
Rolling racks and front hand rail.
1 pc of Chrome grid (164250).

Loipart AB (HQ), **Sweden**
Tel: +46 313 920 100, loipart@loipart.com

LMG Finland Oy, **Finland**
Tel: +358 40 664 6680, lmg@lmg.fi

Loipart USA Inc., **USA**
Tel: +1 954 530 5276, loipartusa@loipart.com

Loipart SEA Pte Ltd, **Singapore**
Tel: +65 670 99 100, contact@loipart.sg

DIMENSIONS

FRONT

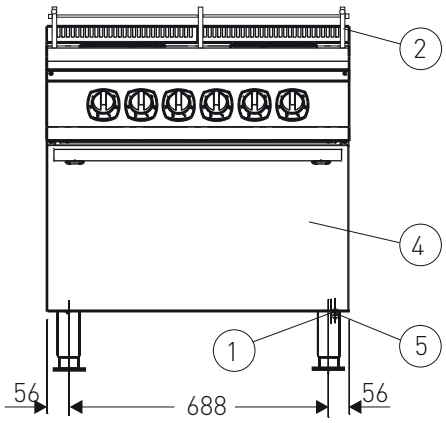

SIDE

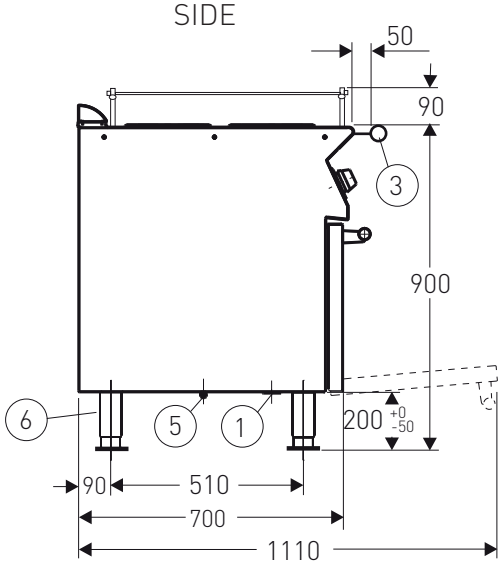

TOP

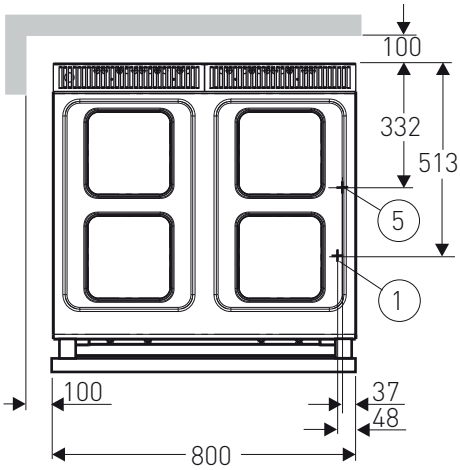

1. Electrical connection
2. Rolling rack
3. Front hand rail
4. Oven 6,0 kW. Cavity width 540mm, depth 650 mm, height 300 mm.
5. Equipotential screw
6. Marine legs

DETAIL MARINE FEET

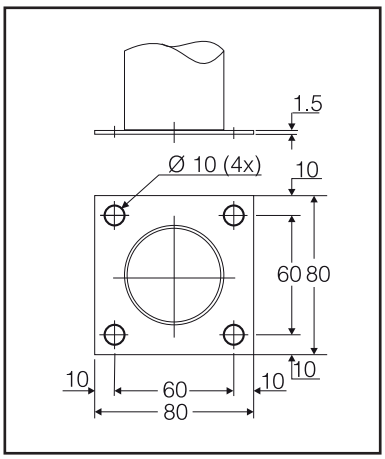

INSTALLATION

The deck standing ovens are delivered with flanged adjustable marine legs for bolting to floor.