

Range, 4 Hot Plates With Oven, 800 mm

Model: L7ECMH4RE5 • Article no: 373149

Power supply: 440V 3Ph ~50/60Hz

The L700 range is designed to guarantee the highest performance, reliability, energy saving, safety standards, and ergonomic operation.

The freestanding range and boiling tops are ideal for galleys needing a flexible, powerful, and easy-to-clean cooking top mounted on an electric oven. Main connections are accessible from below the base of the unit, and it's possible to access all components from the front.

The top is made of 1,5 mm stainless steel pressed in one piece with smooth, rounded corners. Exterior panels in stainless steel with Scotch Brite finish. The four cast iron hot plates have a power of 2.6 kW each.

The oven has a recessed, double-skinned, insulated door for air-tight closure and better hygiene. Oven cavity in stainless steel with a vitreous enameled ribbed base plate to allow for the direct placement of pans. The oven has separate thermostats for the top and bottom elements and has a power of 6 kW. Inside the oven are three levels of runners to accommodate 2/1 GN shelves.

MAIN FEATURES

- Four 2.6kW cast-iron round plates
- Stainless steel oven chamber with 3 levels of runners for 2/1 GN shelves
- Ribbed enameled steel oven base plate
- Oven thermostat adjustable from 140 °C to 300 °C
- IPX 4 water protection
- All exterior panels in Stainless Steel

Subject to change without notice.
For correct installation, refer to installation manual.

Technical data

Certifications & regulations

Certifications	CE
IP Class	X4

Dimensions & weight

Width, net (mm)	800
Depth, net (mm)	730
Height, net (mm)	850
Weight, net (kg)	80
Weight, gross (kg)	100
Volume, net (m3)	0.7
Volume, gross (m3)	0.91

Electric

Voltage (V)	440
Phase	3
Has neutral	No
Frequency (Hz)	50, 60
Connection Cable, length (m)	0
Loading (kW)	16.4
Max Amps in Phase (A)	24
Plug type	None

Functions & appearance

Oven, included	Yes
Pan sizes	GN 2/1
Capacity, pans (pcs)	3
Marine feet	Yes
Hot plate diameter (mm)	230
Hot plate, qty (pcs)	4
Hot plate, type	Round
Installation, type	Floor Model
Noise level < (dB)	70
Oven, type	Static
Range, type	Cast Iron

Loipart AB (HQ), **Sweden**
Tel: +46 313 920 100, loipart@loipart.com

LMG Finland Oy, **Finland**
Tel: +358 40 664 6680, lmg@lmg.fi

Loipart USA Inc., **USA**
Tel: +1 954 530 5276, loipartusa@loipart.com

Loipart SEA Pte Ltd, **Singapore**
Tel: +65 670 99 100, contact@loipart.sg

Temperature, max (°C)	300

General data

Country of origin	Italy
Variant Model Number	L7ECMH4RE5

Included in delivery

Rolling racks and front hand rail.
1 pc of Chrome grid (164250).

Loipart AB (HQ), **Sweden**
Tel: +46 313 920 100, loipart@loipart.com

LMG Finland Oy, **Finland**
Tel: +358 40 664 6680, lmg@lmg.fi

Loipart USA Inc., **USA**
Tel: +1 954 530 5276, loipartusa@loipart.com

Loipart SEA Pte Ltd, **Singapore**
Tel: +65 670 99 100, contact@loipart.sg

DIMENSIONS

FRONT

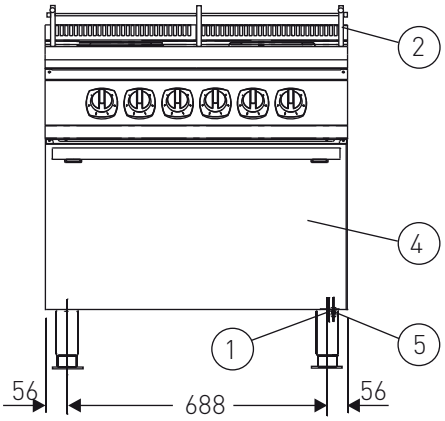

SIDE

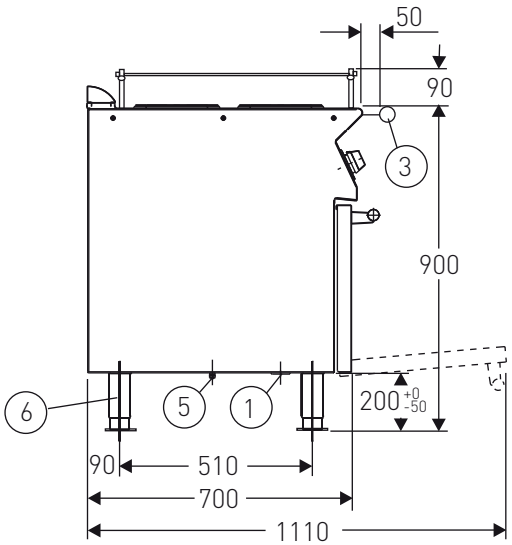

TOP

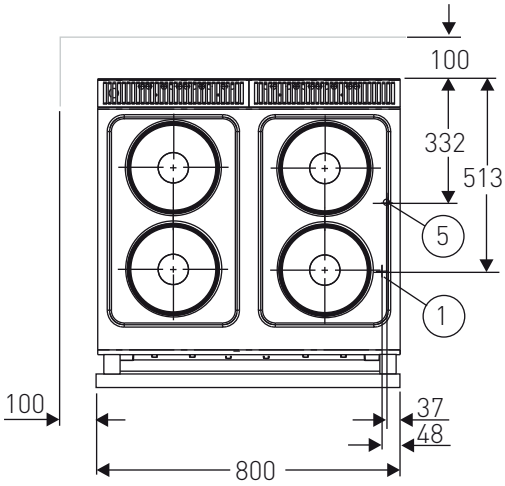

1. Electrical connection
2. Rolling rack
3. Front hand rail
4. Oven 6.0 kW
5. Equipotential screw
6. Marine feet

DETAIL MARINE FEET

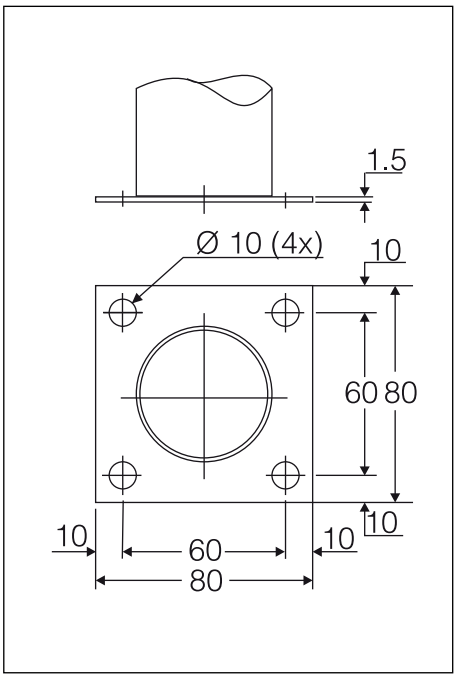

INSTALLATION

The deck standing ovens are delivered with flanged adjustable marine legs for bolting to floor.