

Boiling Pan 100 L

Model: L9BSEHIPF5 • Article no: 393705

Power supply: 440V 3Ph ~50/60Hz

The L900 boiling pan is suitable for cooking, sauté, or poaching all kinds of food. The unit features high-efficiency heating elements (9.4 kW) with energy control and a temperature limiter. The food is uniformly heated in the base and side walls of the kettle by an indirect heating system that uses integrally generated saturated steam at a temperature of 110°C in the jacket.

The model has a pressed cooking vessel and lid in 316 AISI Stainless steel. The external valve allows a manual evacuation of excess air accumulated in the jacket during the heating phase. It also has a large drain tap that enables precise portioning of the discharged food, especially in small quantities.

With ergonomics in mind, the vessel has a unique ratio diameter and depth to facilitate stirring and gentle food handling. The discharge tube and tap are easy to clean from the outside and smooth large surfaces with easy access for cleaning.

MAIN FEATURES

- High-efficiency heating elements (9.4 kW)
- Firmly fitting cover to reduce cooking time and save energy
- Ergonomic and easy-to-clean model
- Solenoid valve to refill with hot and cold water
- Right-angled side edges to allow flush fitting joints between units, eliminating gaps and possible dirt traps
- Exterior panels in stainless steel with Scotch Brite finish
- One piece pressed 1.5 mm work top in Stainless steel

L9BSEHIPF5, 393705
9/30/2026 3:15 PM

Subject to change without notice.
For correct installation, refer to installation manual.

Technical data

Certifications & regulations

Certifications	CE
IP Class	X5

Dimensions & weight

Width, net (mm)	800
Depth, net (mm)	930
Height, net (mm)	900
Weight, net (kg)	135
Weight, gross (kg)	160
Volume, net (m3)	0.67
Volume, gross (m3)	0.87

Electric

Voltage (V)	440
Phase	3
Has neutral	No
Frequency (Hz)	50, 60
Connection Cable, length (m)	0
Loading (kW)	21.5
Plug type	None

Functions & appearance

Capacity (L)	100
Marine feet	Yes
Installation, type	Floor Model
Noise level < (dB)	70

General data

Country of origin	Italy
Variant Model Number	L9BSEHIPF5

Water

Cold water inlet, diameter (")	3/4
Drain pipe, diameter (")	2
Hot water inlet, diameter (")	3/4

DIMENSIONS

Model: L9BSEHIPF5 *Rev. 1*

FRONT

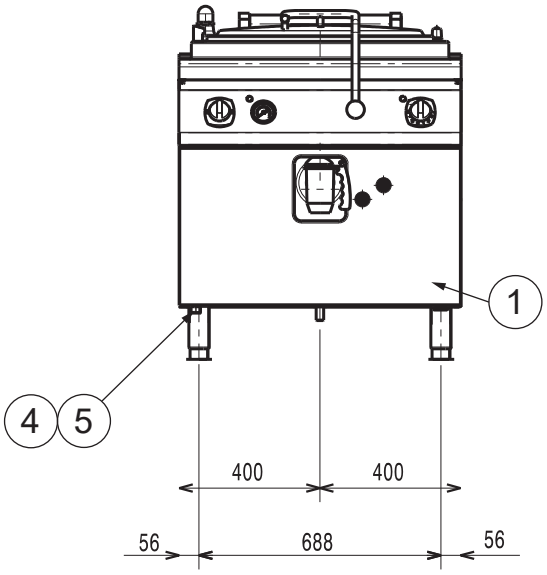

SIDE

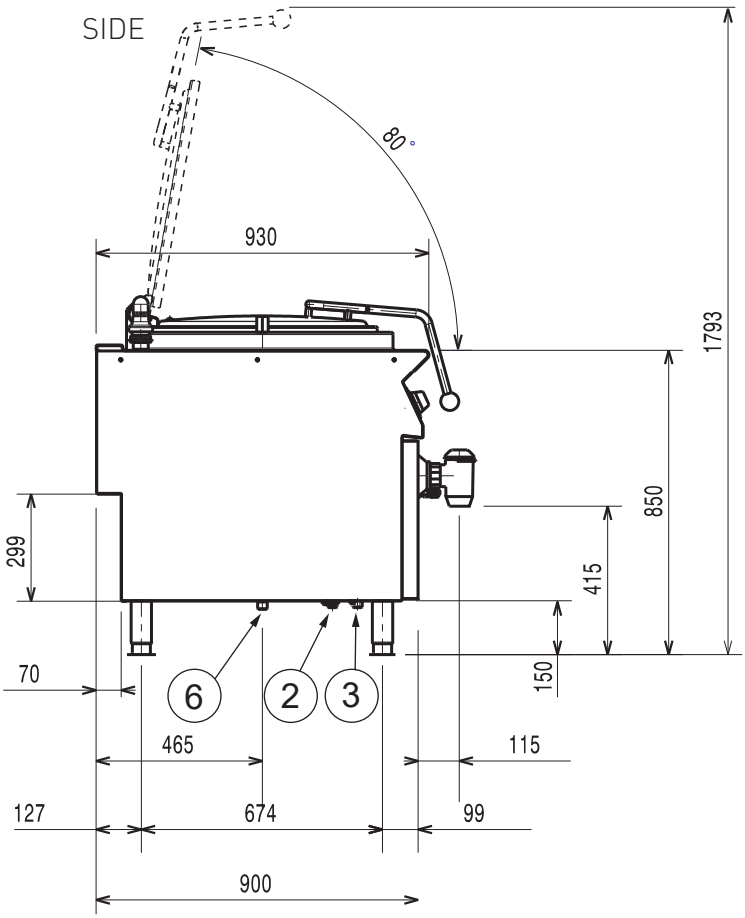

TOP

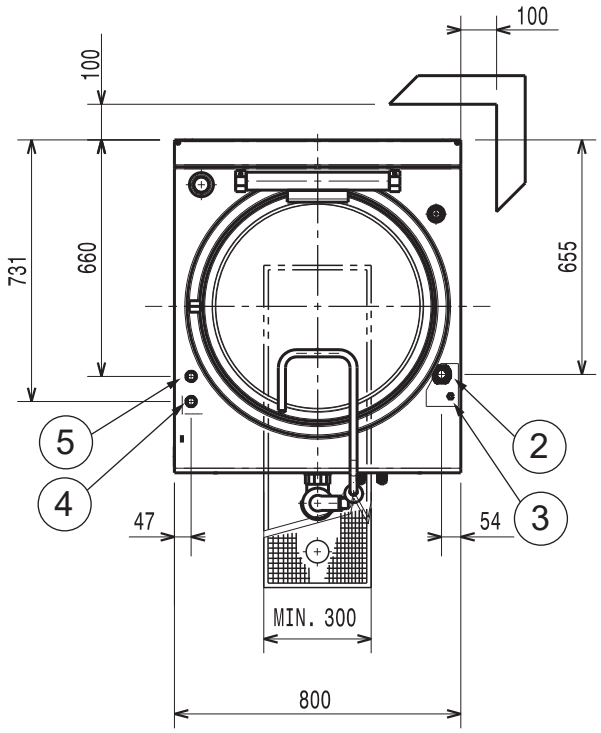

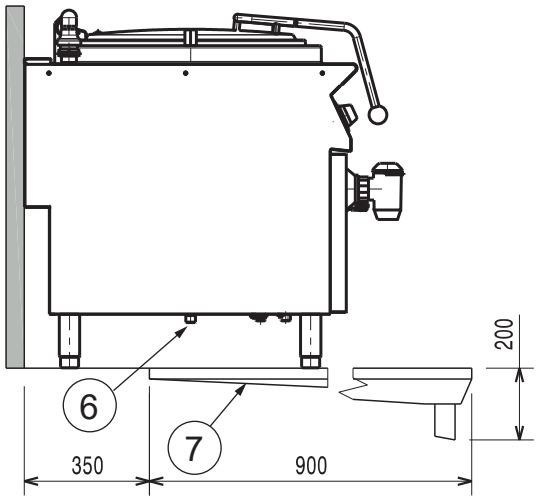

DETAIL MARINE FOOT

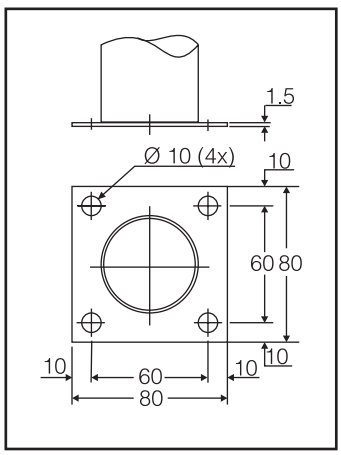

1. Electrical connection point (terminal board) located behind the front cover
2. Electrical supply inlet
3. Equipotential screw
4. Cold water inlet 3/4”
5. Hot water inlet 3/4”
6. Drain 2”
7. Floor outlet and gutter

LOIPART