

Cooking Top, 2 Hot Plates, 400 mm

Model: L9ECMD2Q05 • Article no: 393181

Power supply: 440V 3Ph ~50/60Hz

The L900 series of cooking tops guarantees the highest performance, reliability, energy saving, safety standards, and ergonomic operation.

This cooking top is to be mounted on an open base cupboard, bridging support, or cantilever system.

The two hermetically sealed 4kW cast-iron plates are mounted on a one-piece pressed 2 mm stainless steel worktop. The design of the control knob system guarantees against water infiltration. The right-angled side edges allow flush-fitting joints between units, eliminating gaps and possible dirt traps.

MAIN FEATURES

- Two 4kW cast-iron plates
- IPX5 water protection
- All exterior panels in stainless steel with Scotch Brite finishing
- One-piece pressed 2 mm stainless steel worktop

Subject to change without notice.
For correct installation, refer to installation manual.

Technical data

Certifications & regulations

Certifications	CE
IP Class	X5

Dimensions & weight

Width, net (mm)	400
Depth, net (mm)	930
Height, net (mm)	251
Weight, net (kg)	38
Weight, gross (kg)	53
Volume, net (m3)	0.25
Volume, gross (m3)	0.33

Electric

Voltage (V)	440
Phase	3
Has neutral	No
Frequency (Hz)	50, 60
Connection Cable, length (m)	0
Loading (kW)	8
Max Amps in Phase (A)	15.8
Plug type	None

Functions & appearance

Hot plate dimensions (mm)	300X300
Hot plate, qty (pcs)	2
Hot plate, type	Square
Installation, type	Table Top Model
Noise level < (dB)	70
Range, type	Cast Iron

General data

Country of origin	Italy
Variant Model Number	L9ECMD2Q05

Included in delivery

Loipart AB (HQ), **Sweden**
Tel: +46 313 920 100, loipart@loipart.com

LMG Finland Oy, **Finland**
Tel: +358 40 664 6680, lmg@lmg.fi

Loipart USA Inc., **USA**
Tel: +1 954 530 5276, loipartusa@loipart.com

Loipart SEA Pte Ltd, **Singapore**
Tel: +65 670 99 100, contact@loipart.sg

Front handrail and rolling racks.

Loipart AB (HQ), **Sweden**
Tel: +46 313 920 100, loipart@loipart.com

LMG Finland Oy, **Finland**
Tel: +358 40 664 6680, lmg@lmg.fi

Loipart USA Inc., **USA**
Tel: +1 954 530 5276, loipartusa@loipart.com

Loipart SEA Pte Ltd, **Singapore**
Tel: +65 670 99 100, contact@loipart.sg

DIMENSIONS

FRONT

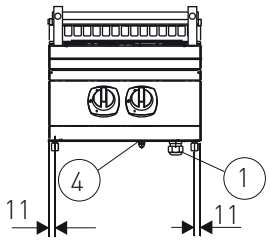

SIDE

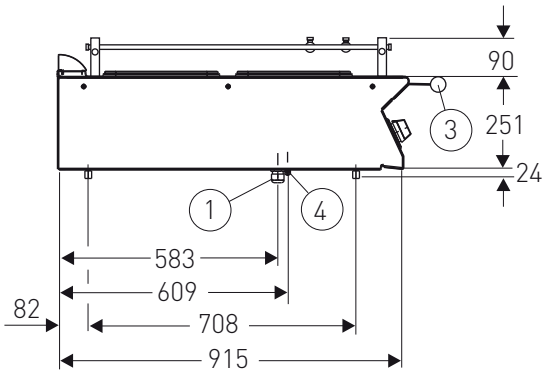

TOP

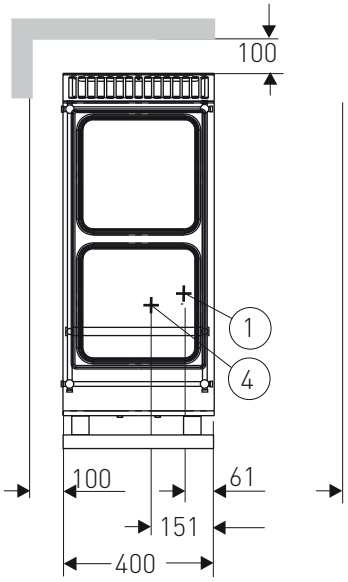

1. Electrical connection
2. Rolling rack
3. Front hand rail
4. Equipotential screw