

Range, 4 Hot Plates With Oven, 800 mm

Model: L9ECMH4QE65 • Article no: 393185

Power supply: 440V 3Ph ~50/60Hz

The L900 range is designed to guarantee the highest performance, reliability, energy saving, safety standards, and ergonomic operation.

The freestanding range and boiling tops are ideal for galleys needing a flexible, powerful, and easy-to-clean cooking top mounted on an electric oven. Main connections are accessible from below the base of the unit, and it's possible to access all components from the front.

The top is made of 1,5 mm stainless steel pressed in one piece with smooth, rounded corners. Exterior panels in stainless steel with Scotch Brite finish. The four cast iron hot plates have a power of 4 kW each.

The oven has a recessed, double-skinned, insulated door for air-tight closure and better hygiene. Oven cavity in stainless steel with a vitreous enameled ribbed base plate to allow for the direct placement of pans. The oven has separate thermostats for the top and bottom elements and has a power of 6 kW. Inside the oven are three levels of runners to accommodate 2/1 GN shelves.

MAIN FEATURES

- Four 4W cast-iron square plates
- Stainless steel oven chamber with 3 levels of runners for 2/1 GN shelves
- Ribbed enameled steel oven base plate.
- 6 kW oven with thermostat adjustable from 100°C to 300°C.

Subject to change without notice.
For correct installation, refer to installation manual.

Technical data

Certifications & regulations

Certifications	CE
IP Class	X5

Dimensions & weight

Width, net (mm)	800
Depth, net (mm)	930
Height, net (mm)	900
Weight, net (kg)	135
Weight, gross (kg)	160
Volume, net (m3)	0.67
Volume, gross (m3)	0.99

Electric

Voltage (V)	440
Phase	3
Has neutral	No
Frequency (Hz)	50, 60
Connection Cable, length (m)	0
Loading (kW)	22
Max Amps in Phase (A)	33.4
Plug type	None

Functions & appearance

Oven, included	Yes
Pan sizes	GN 2/1
Capacity, pans (pcs)	3
Marine feet	Yes
Hot plate dimensions (mm)	300X300
Hot plate, type	Square
Installation, type	Floor Model
Noise level < (dB)	70
Oven, type	Static
Range, type	Cast Iron
Temperature, max (°C)	300

Loipart AB (HQ), **Sweden**
Tel: +46 313 920 100, loipart@loipart.com

LMG Finland Oy, **Finland**
Tel: +358 40 664 6680, lmg@lmg.fi

Loipart USA Inc., **USA**
Tel: +1 954 530 5276, loipartusa@loipart.com

Loipart SEA Pte Ltd, **Singapore**
Tel: +65 670 99 100, contact@loipart.sg

General data

Country of origin	Italy
Variant Model Number	L9ECMH4QE65

Included in delivery

Rolling racks and front hand rail.
1 pc of Chrome grid.

Loipart AB (HQ), **Sweden**
Tel: +46 313 920 100, loipart@loipart.com

LMG Finland Oy, **Finland**
Tel: +358 40 664 6680, lmg@lmg.fi

Loipart USA Inc., **USA**
Tel: +1 954 530 5276, loipartusa@loipart.com

Loipart SEA Pte Ltd, **Singapore**
Tel: +65 670 99 100, contact@loipart.sg

FRONT

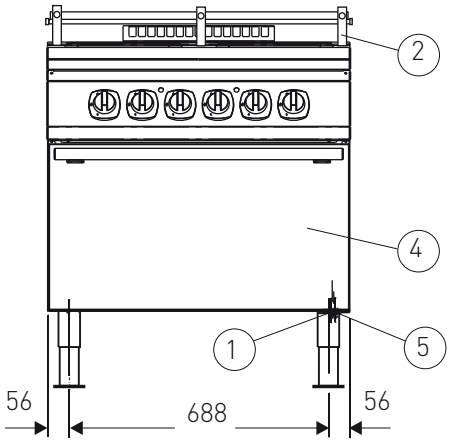

SIDE

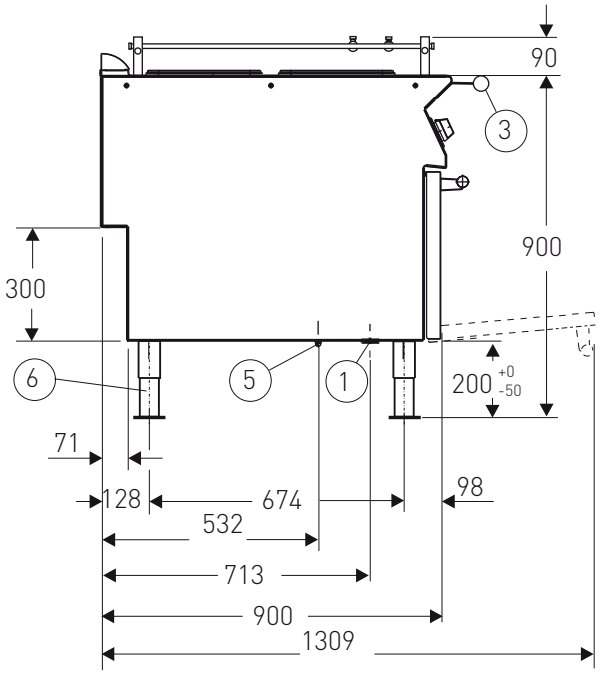

TOP

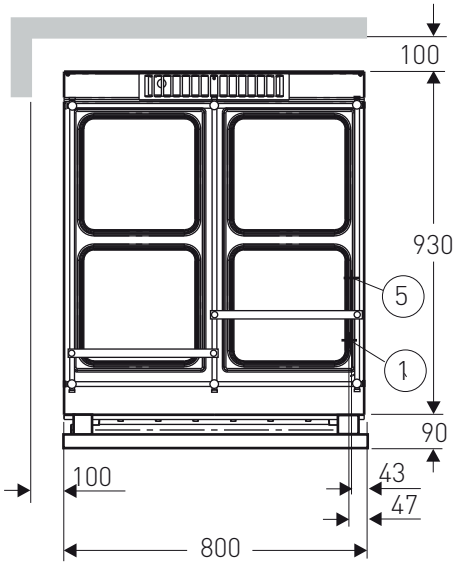

1. Electrical connection
2. Rolling rack
3. Front hand rail
4. Oven 6 kW
5. Equipotential screw
6. Marine feet

DETAIL MARINE FOOT

