

Grill Top Hp, 1200 mm

Model: L9JJCJAOMI6 • Article no: 393366

Power supply: 440V 3Ph ~50/60Hz

Large module electric grill top HP (high performance) comes with removable 2mm thick steel U-shaped grids for fast heating of the cooking surface. Heating via incoloy armored heating elements positioned under the removable cooking grid. Each bank of elements has an independent power regulation through a control knob. The model also has removable stainless steel deflectors to recuperate heat and reduce cooking time.

The grill has a fixed well with a drain to collect residual cooking juices and grease. The grill has a water-filling tap and a control knob at the front. Water must be added to the well before an operation; it takes 9 min to fill the 24 L well with 3 bar water pressure. The large drain is protected by overflow and filter.

The grill is made as a one-piece pressed 2 mm worktop in stainless steel and right-angled side edges to allow flush fitting joints between units, eliminating gaps and possible dirt traps. The splash guards on the sides of the cooking surface can easily be removed for cleaning.

MAIN FEATURES

- Integrated water tap
- Fixed well with drain
- WRAS compliant
- Heating elements are tiltable 90° for easy cleaning
- Removable stainless steel deflectors
- Led warning indicator to give an alarm when the well is empty
- Top configuration allows installation on an ambient base

L9JJCJAOMI6, 393366
9/30/2026 3:47 PM

Subject to change without notice.
For correct installation, refer to installation manual.

Technical data

Certifications & regulations

Certifications	CE
IP Class	X5

Dimensions & weight

Width, net (mm)	1200
Depth, net (mm)	930
Height, net (mm)	250
Weight, net (kg)	143
Weight, gross (kg)	153
Volume, net (m3)	0.28
Volume, gross (m3)	0.36

Electric

Voltage (V)	440
Phase	3
Has neutral	No
Frequency (Hz)	50, 60
Connection Cable, length (m)	0
Loading (kW)	11.6
Plug type	None

Functions & appearance

Cooking surface, dimensions (mm)	1065x598
Installation, type	Top Model
Noise level < (dB)	70

General data

Country of origin	Italy
Variant Model Number	L9JJCJAOMI6

Water

Cold water inlet, diameter (")	3/4
Drain pipe, diameter (")	1 3/4
Pressure, max (Bar)	3
Water pressure, max (Bar)	8

Loipart AB (HQ), **Sweden**
Tel: +46 313 920 100, loipart@loipart.com

LMG Finland Oy, **Finland**
Tel: +358 40 664 6680, lmg@lmg.fi

Loipart USA Inc., **USA**
Tel: +1 954 530 5276, loipartusa@loipart.com

Loipart SEA Pte Ltd, **Singapore**
Tel: +65 670 99 100, contact@loipart.sg

Water pressure, min (Bar)	1

Loipart AB (HQ), **Sweden**
Tel: +46 313 920 100, loipart@loipart.com

LMG Finland Oy, **Finland**
Tel: +358 40 664 6680, lmg@lmg.fi

Loipart USA Inc., **USA**
Tel: +1 954 530 5276, loipartusa@loipart.com

Loipart SEA Pte Ltd, **Singapore**
Tel: +65 670 99 100, contact@loipart.sg

DIMENSIONS

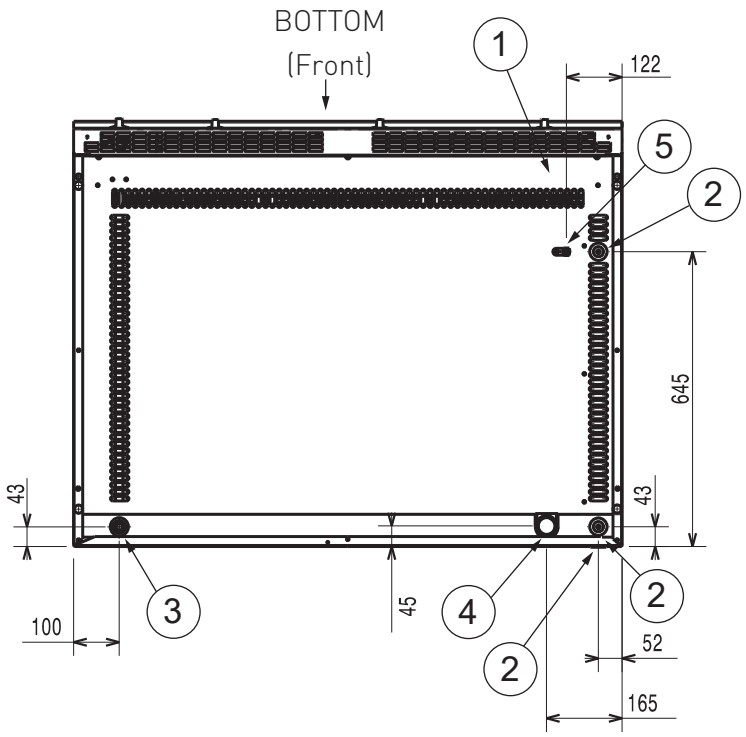

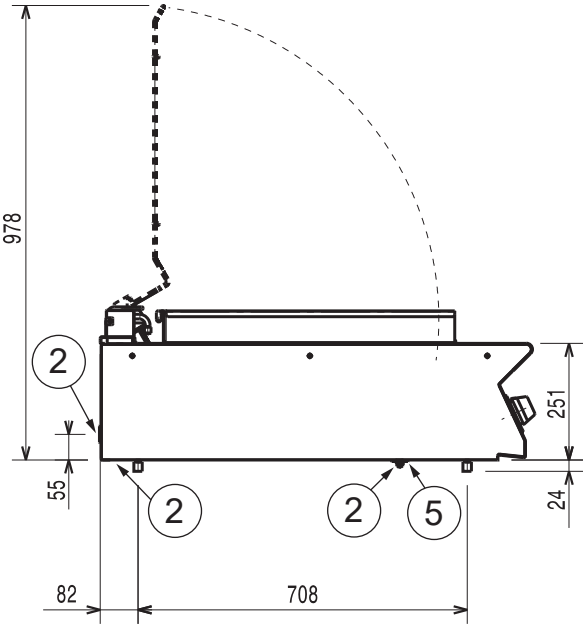

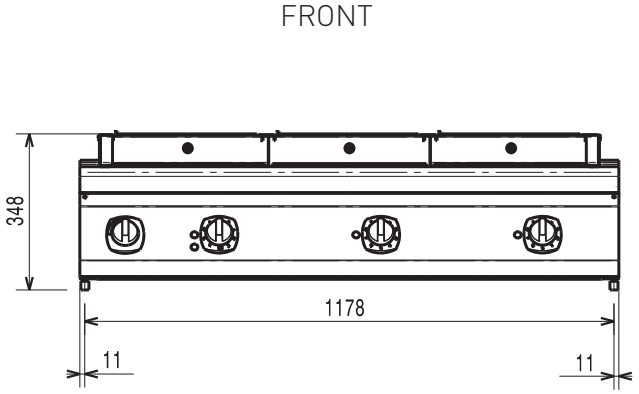

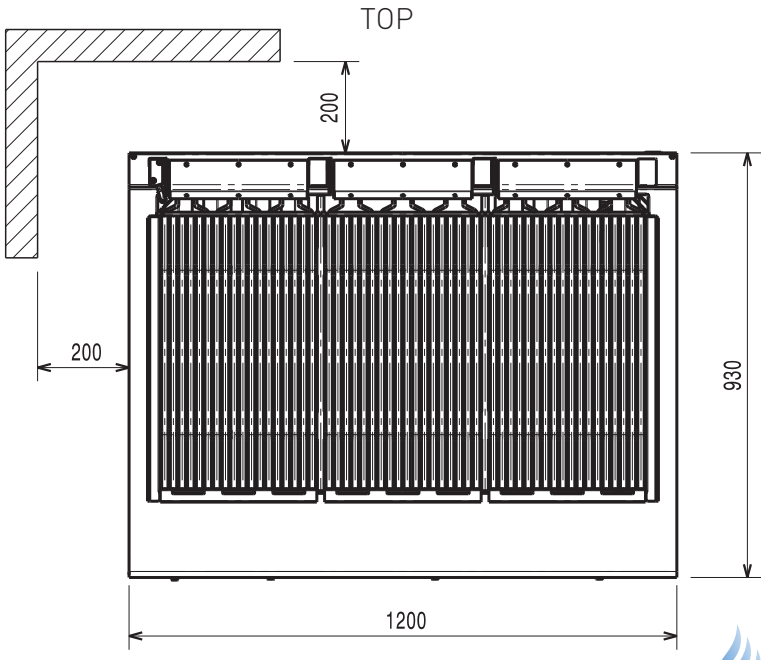

1. Electrical connection point (terminal board) located behind the front panel
2. Electrical supply inlet
3. Water inlet 3/4
4. Drain 1 3/4
5. Equipotential screw

LOIPART