

Deep Fat Fryer 2X23 L, 800 mm

Model: L9KKGJBAME6 • Article no: 393383

Power supply: 440V 3Ph ~50-60Hz

The freestanding fryer is ideal for galleys needing a versatile, efficient, and easy-to-clean unit capable of cooking numerous portions time after time.

The fryer has high-efficiency (36 kW) external infrared heating elements with innovative deflectors applied to the v-shaped well for easy cleaning and safe operation.

The oil drains through a tap into a container under the well—the interior of wells with seamlessly laser-welded corners for easy cleaning. The right-angled side edges allow flush-fitting joints between units, eliminating gaps and possible dirt traps.

All major compartments of the fryer are located in front of the unit for ease of maintenance—an optional portable oil quality monitoring tool (code 9B8081) for efficient oil management.

MAIN FEATURES

- One deep-drawn V-Shaped well of 2x23 L
- External elements
- Thermostatic regulation of oil temperature up to a maximum of 185 °C
- Overheat protection thermostat
- 4 half-size baskets

L9KKGJBAME6, 393383
9/30/2026 3:45 PM

Subject to change without notice.
For correct installation, refer to installation manual.

Technical data

Certifications & regulations

Certifications	CE
IP Class	X5
In complience with SOLAS	Yes

Dimensions & weight

Width, net (mm)	800
Depth, net (mm)	930
Height, net (mm)	850
Weight, net (kg)	115
Weight, gross (kg)	120
Volume, net (m3)	0.64
Volume, gross (m3)	0.95

Electric

Voltage (V)	440
Phase	3
Has neutral	No
Frequency (Hz)	50-60
Connection Cable, length (m)	0
Loading (kW)	36
Plug type	None

Functions & appearance

Wells, qty (pcs)	2
Capacity (L)	48
Fryer, type	ExternalElement
Marine feet	Yes
Installation, type	Floor Model
Noise level < (dB)	70
Temperature, max (°C)	185
Well dimension (mm)	340x575
Well height (mm)	400

General data

Country of origin	Italy
Variant Model Number	L9KKGJBAME6

Included in delivery

Incl. lid, four (4) half baskets, and an oil bucket.

Loipart AB (HQ), **Sweden**
Tel: +46 313 920 100, loipart@loipart.com

LMG Finland Oy, **Finland**
Tel: +358 40 664 6680, lmg@lmg.fi

Loipart USA Inc., **USA**
Tel: +1 954 530 5276, loipartusa@loipart.com

Loipart SEA Pte Ltd, **Singapore**
Tel: +65 670 99 100, contact@loipart.sg

DIMENSIONS

FRONT

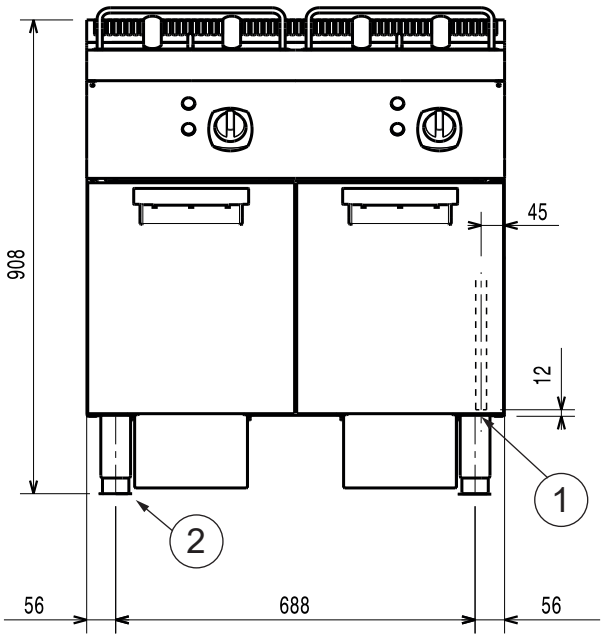

SIDE

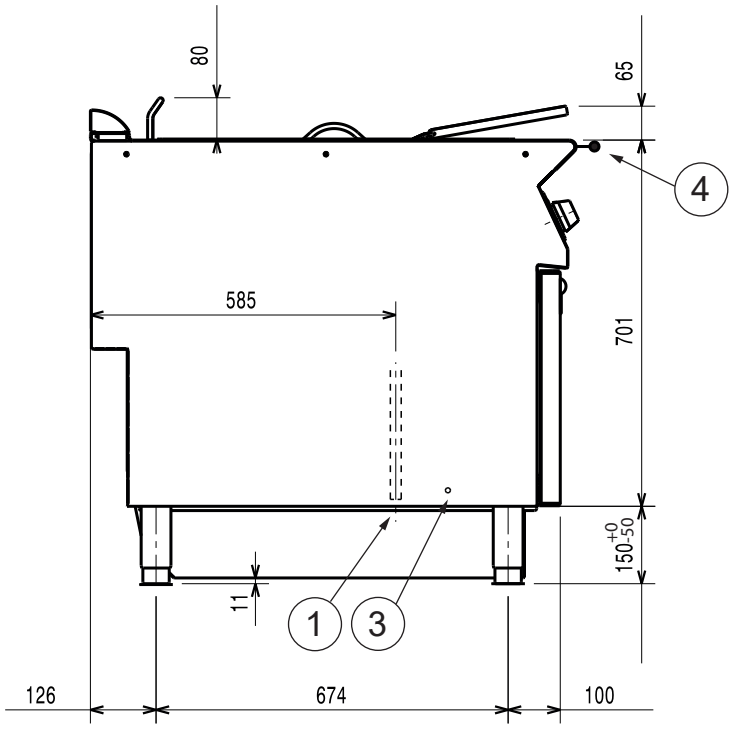

TOP

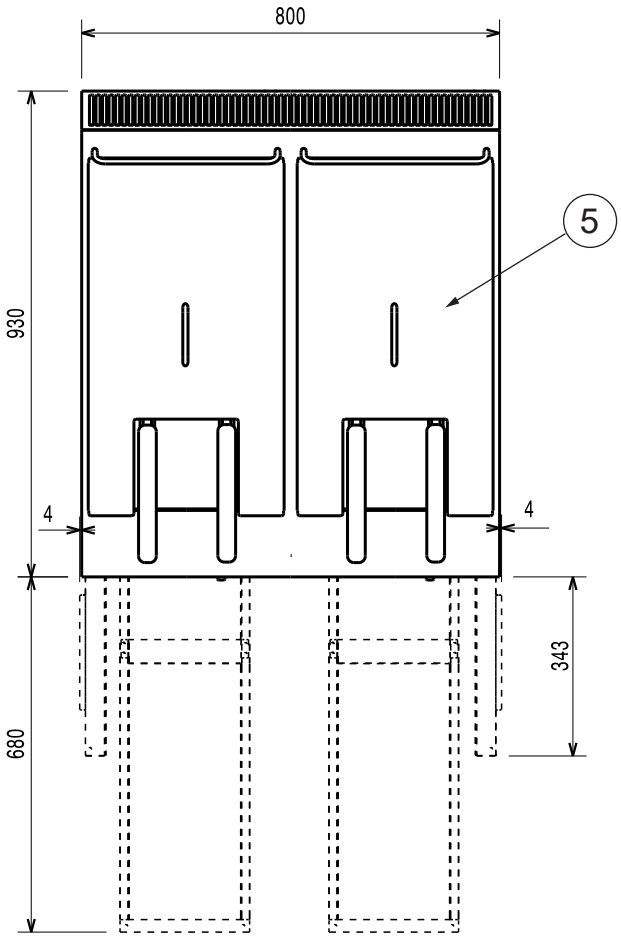

1. Electrical connection
2. Marine feet
3. Fromt hand rail (optional)
4. Equipotential screw
5. Lid (included in delivery)

DETAIL MARINE FEET

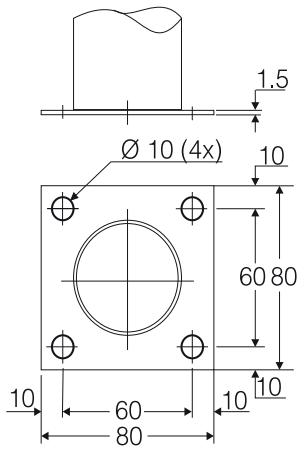

Positioning

Please note! If appliance is set up or next to or against temperature sensitive furniture or similar, a safety gap of approximately 150 mm should be maintained or some form of heat insulation fitted.

