

Aqua Cooker 1/1 GN

Model: MCBDEADDDM • Article no: 589686V400350

Power supply: 400V 3Ph ~50/60Hz

This freestanding Aquacooker is a versatile appliance that combines low-temperature cooking (sous-vide) and pasta-cooking functions and can also be used as a bain-marie. The water basin is made from AISI 316L stainless steel and is seamlessly welded into the top of the appliance. It is built to DIN 18860_2 and features a 20 mm drop-nose top and a 70 mm recessed plinth. The internal frame is made from stainless steel and designed for heavy-duty durability. The top is 2 mm thick and made from 1.4301 (AISI 304) stainless steel, providing a flat, easy-to-clean surface.

The THERMODUL connection system allows for a seamless worktop when the units are connected, preventing soil from penetrating. The large, visible digital display, manufactured from tempered glass to resist heat and chemicals, shows temperatures or power settings. The display also indicates the appliance's and heating elements' on/off status.

An automatic two-speed, constant water-level refill system ensures smooth overnight cooking, while precise water-temperature control maintains stability during low-temperature cooking cycles. The powerful heating elements contribute to a fast warm-up time.

Safety features include automatic low-water-level shut-off to prevent overheating and raised edges around the

MAIN FEATURES

- Configuration: freestanding, one-side operated
- Appliance that combines low-temperature cooking and pasta cooking functions, or serves as a bain-marie.
- Standby mode saves energy and allows for quick recovery to maximum power
- Metal knobs with embedded hygienic silicon "soft" grip for easier handling and cleaning
- Constant water level refill
- Large display

Subject to change without notice.
For correct installation, refer to installation manual.

basin to protect against soil infiltration. The standby function saves energy and enables quick recovery to maximum power. The metal knobs and handles have embedded hygienic silicone "soft" grips, making handling and cleaning easier.

Subject to change without notice.
For correct installation, refer to installation manual.

Technical data

Dimensions & weight

Width, net (mm)	400
Depth, net (mm)	900
Height, net (mm)	700
Weight, net (kg)	72
Weight, gross (kg)	79

Electric

Voltage (V)	400
Phase	3
Has neutral	No
Frequency (Hz)	50, 60

Functions & appearance

Capacity (L)	21
Well dimension (mm)	309x512x205

General data

Country of origin	Italy
Variant Model Number	MCBDEADDDM

Water

Cold water inlet, diameter (")	3/4
Drain pipe, diameter (")	1
Water pressure, max (Bar)	3
Water pressure, min (Bar)	1.5

FRONT

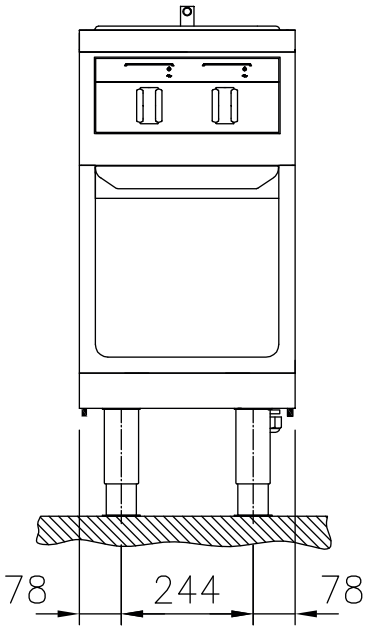

SIDE

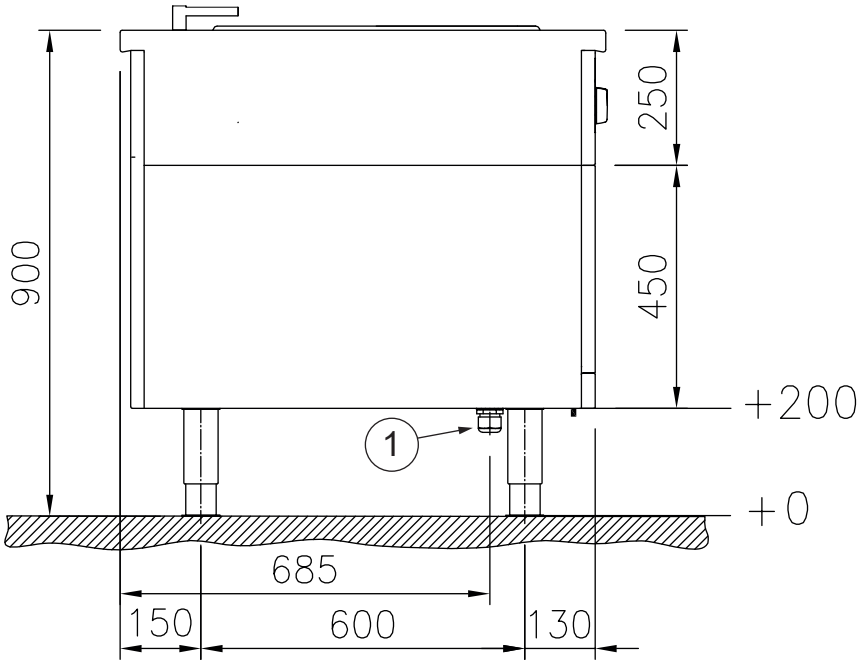

TOP

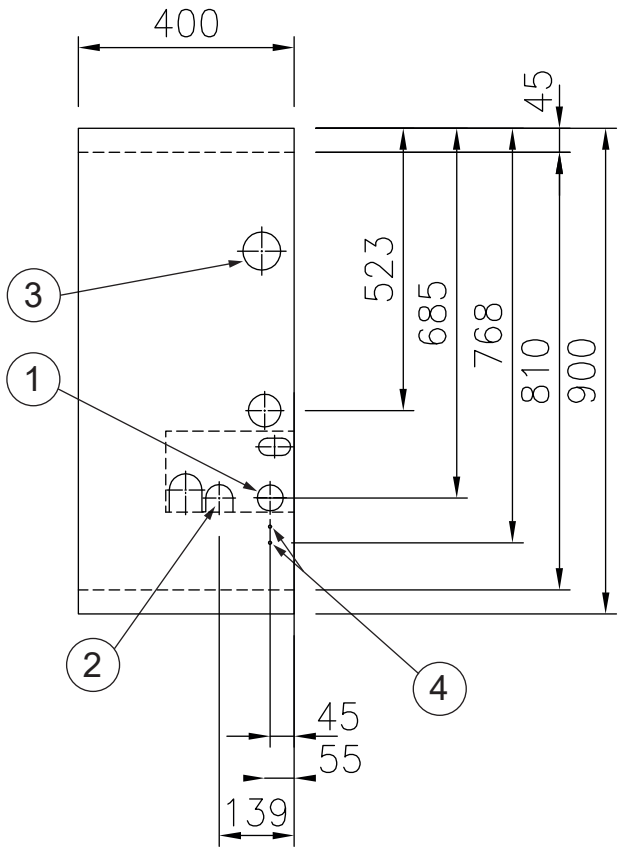

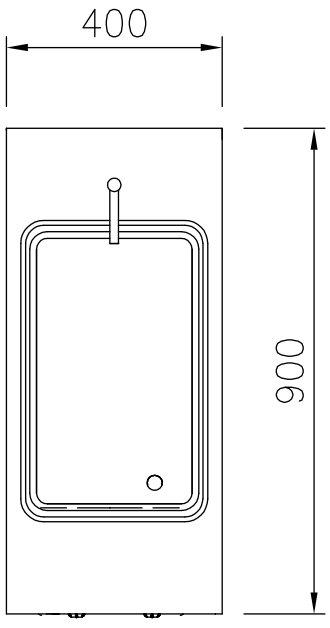

For installation options refer to the installation manual and the section D "Installation diagrams."

1. Electrical connection
2. Drain Ø 1"
3. Cold water inlet 3/4"
4. Equipotential point

LOIPART