

Deep Fat Fryer 2x10L without nitrogen cylinder.

Model: MFEX24-D20 • Article no: L24267EUROPE

Power supply: 400V 3Ph ~50Hz

This model integrates an electric deep fryer and a wet-chemical fire-extinguishing system in a stainless-steel housing with a built-in exhaust hood and blower. It has been tested to**ISO 15371:2009** and can be installed under a standard cooking hood or connected directly to a central ventilation duct. The extinguishing cylinder and control assembly are located on the right side of the lower casing.

The unit meets**SOLAS** requirements and offers both automatic and manual release. It uses an environmentally friendly extinguishing agent with a long shelf life and features an external power-cut-off and a remote alarm panel for enhanced electrical safety. All key components are accessible from the front for easy maintenance.

Note: The **nitrogen cylinder (LT-30-R)** and **wet chemical agent (Ansul R-102)** are **not included** and must be installed by an **authorized Ansul technician**. Find your local Ansul distributor: https://www.ansul.com/find-a-distributor

MAIN FEATURES

- High power density for fast temperature recovery and consistent frying quality
- Submerged heating elements that maximize energy transfer
- Deep cold-oil zone extending the lifespan of frying oil
- SUS304 stainless steel construction inside and out

MFEX24-D20, L24267EUROPE
9/30/2026 3:44 PM

Subject to change without notice.
For correct installation, refer to installation manual.

Technical data

Certifications & regulations

Certifications	CE
IP Class	44
In complience with SOLAS	Yes

Dimensions & weight

Width, net (mm)	650
Depth, net (mm)	800
Height, net (mm)	1750
Weight, net (kg)	150
Weight, gross (kg)	180
Volume, net (m3)	0.91
Volume, gross (m3)	1.18

Electric

Voltage (V)	400
Phase	3
Has neutral	No
Frequency (Hz)	50
Loading (kW)	9.8
Plug type	None

Functions & appearance

Wells, qty (pcs)	2
Capacity (L)	20
Fryer, type	InternalElement
Marine feet	Yes
Installation, type	Floor Model
Temperature, max (°C)	200

General data

Country of origin	China
Variant Model Number	MFEX24-D20

Included in delivery

Kit with standard spare parts is included in the delivery.

- Fuse PJ.05.001 (2 pcs)
- Power pilot lamp, white PJ.02.002
- Work pilot lamp green PJ.02.008
- R-102 Fusible metal (2 pcs)
- Manual release puller lock pin
- Testing link
- Spare parts box

Loipart AB (HQ), **Sweden**
Tel: +46 313 920 100, loipart@loipart.com

LMG Finland Oy, **Finland**
Tel: +358 40 664 6680, lmg@lmg.fi

Loipart USA Inc., **USA**
Tel: +1 954 530 5276, loipartusa@loipart.com

Loipart SEA Pte Ltd, **Singapore**
Tel: +65 670 99 100, contact@loipart.sg

FRONT

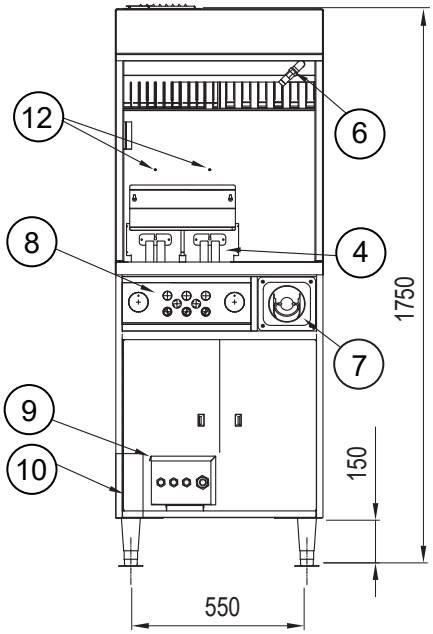

SIDE

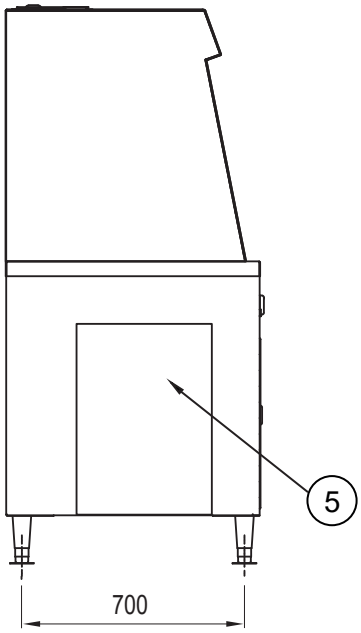

TOP

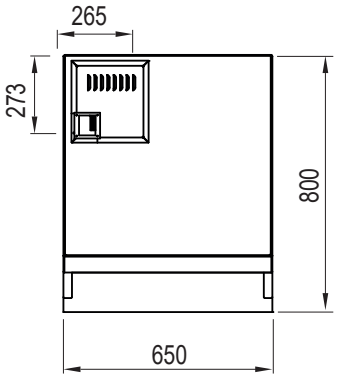

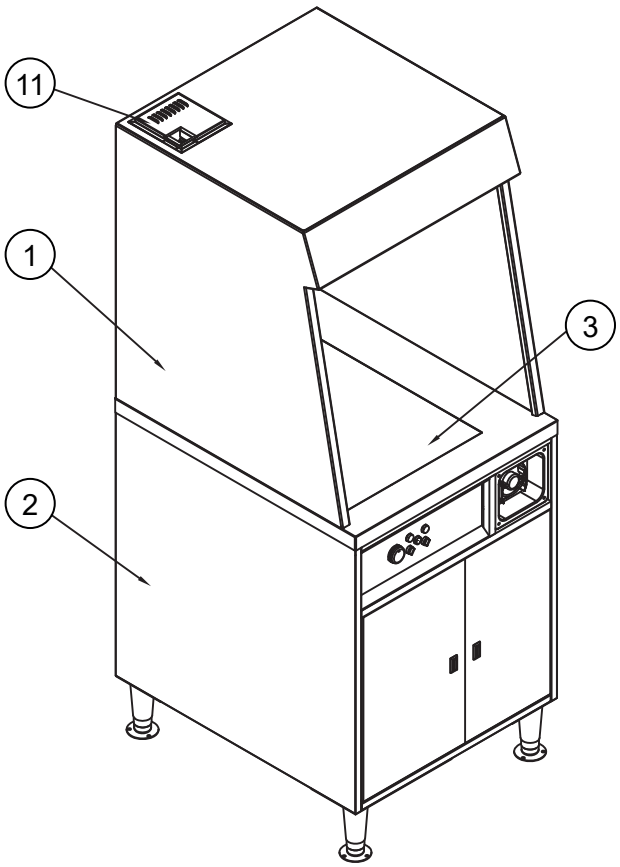

1. Upper casing
2. Lower casing
3. Frying pot
4. Heating element
5. Extinguish system
6. Extinguish nozzle
7. Manual release puller
8. Control panel
9. Control box
10. Connection box
11. Blower outlet
12. Alarming reset

DIMENSIONS

POSITION OF FEET

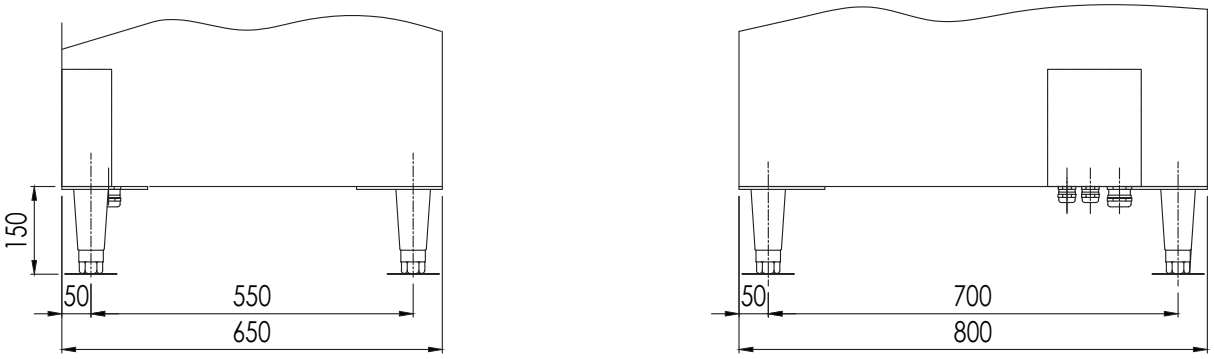

BOTTOM

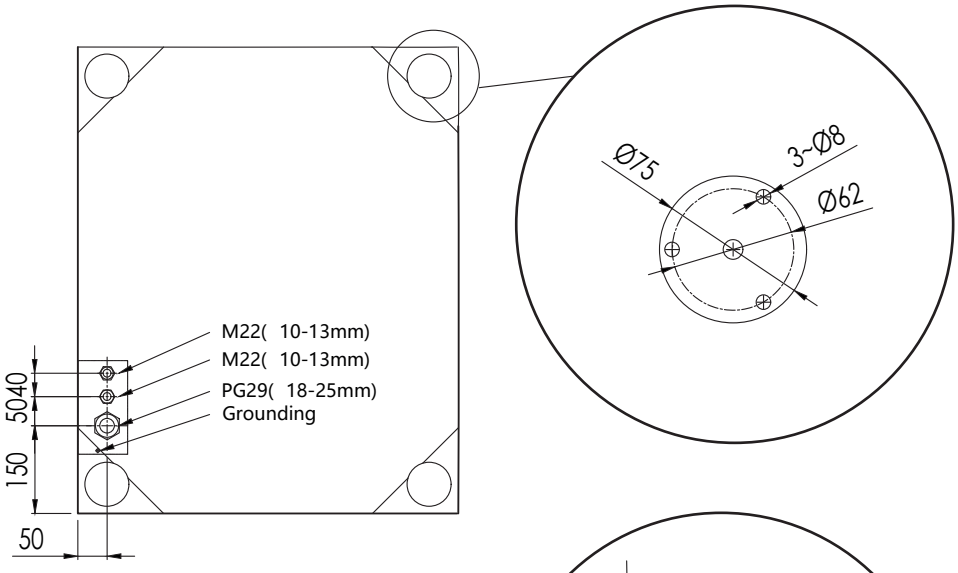

TOP

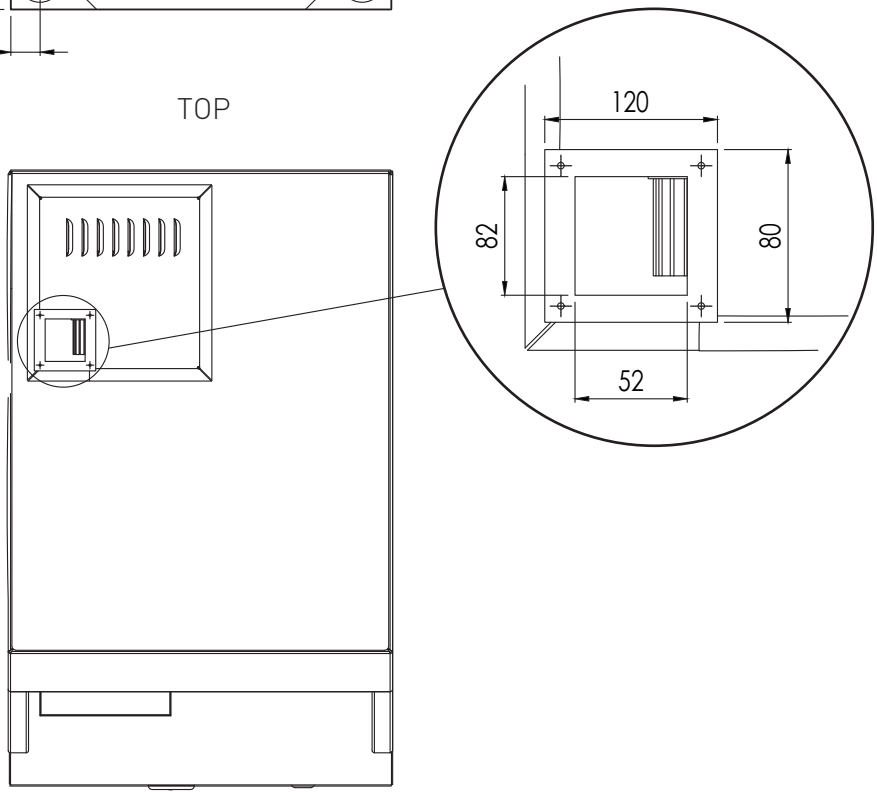

Frying pot

FRONT

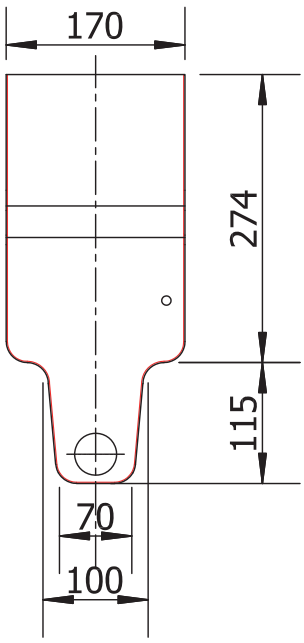

SIDE

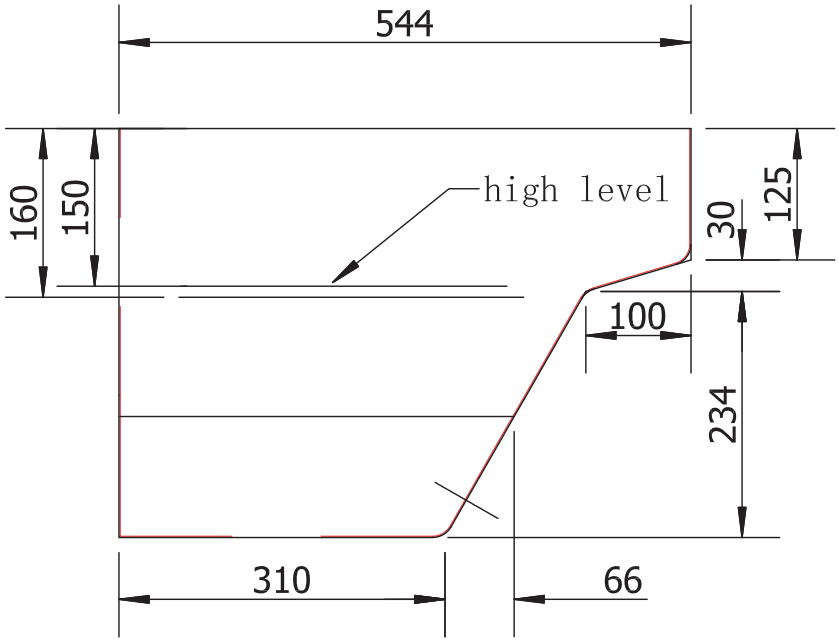

TOP

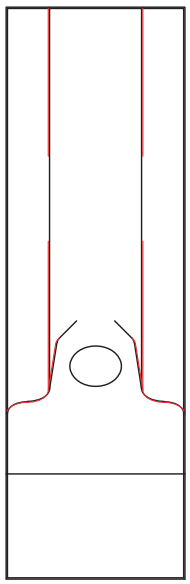

Disclaimer for Model nos. MFEX24-20-EUROPE, MFEX24-10-EUROPE & MFEX24-D20-EUROPE

The information provided in this document is for general guidance and product reference only. Specifications, features, and compliance details are subject to change without prior notice as part of ongoing product development.

The MFEX24 Deep Fat Fryers, including their integrated fire extinguishing system and nozzles, are MED-certified and manufactured to comply with the *Consolidated Edition 2009 of the International Convention for the Safety of Life at Sea (SOLAS), Chapter II-2, Regulation 10, Paragraph 6.4.*

For logistical reasons, the nitrogen cylinder (LT-30-R) and the wet chemical agent (Ansul R-102) are not included in the delivery. These components must be sourced, installed, and commissioned locally by authorized ANSUL personnel in order to remain fully compliant with *SOLAS, Chapter II-2, Regulation 10, Paragraph 6.4.* For assistance in locating your nearest ANSUL service center, please contact **technical@loipart.se.**

The MFEX24-10 must be installed, commissioned, and maintained by qualified personnel in accordance with the manufacturer's installation instructions and applicable marine safety regulations. Failure to comply with these requirements may result in non-compliance, improper performance, or loss of certification validity.
Loipart AB, as the distributor, assumes no responsibility for damages, injury, or non-compliance resulting from unauthorized modifications, improper installation, or misuse of the equipment. All references to SOLAS and ISO standards reflect compliance at the time of manufacture.

We hope this explanation has helped clarify the matter. Please don't hesitate to contact us if you have any further questions — we are always at your service.

Sincerely yours,

2025-11-04

Mikael Eliasson
CSO – Chief Sales Officer
Loipart AB
mikael.eliasson@loipart.com
+46 707 63 15 76