

Boiling Pan 200 L, Prearranged For Stirrer, Floorstanding

Model: PBOT20RD • Article no: 587162

Power supply: 440V 3Ph ~60Hz

A boiling pan suitable to boil, steam, poach, braise or simmer all kinds of produce. Ergonomic vessel dimensions, with a large diameter and shallow depth that facilitate stirring and gentle food handling. The pan has a motorized, variable pan tilting and "SOFT STOP." Tilting and pouring speeds can be precisely adjusted, and the pan can be tilted over 90° to facilitate pouring and cleaning operations.

The food is uniformly heated via the base and the side walls of the pan by an indirect heating system. The system uses integrally generated saturated steam at a maximum temperature of 125° C in a jacket with an automatic deaeration system. The safety valve avoids overpressure of the steam in the jacket, and the safety thermostat protects against low water level in the double jacket.

The pan has a touch control panel that can store recipes in the single or multiphase cooking process, with different temperature settings. The built-in temperature sensors enable precise control of the cooking process.

MAIN FEATURES

- Motorized tilting with soft stop
- IPX6 water-resistant
- Kettle is jacketed up to 134 mm from the upper rim
- Built-in temperature sensor
- USB connection to easily update the software, upload recipes and download HACCP data

PBOT20RD, 587162
9/30/2026 3:33 PM

Subject to change without notice.
For correct installation, refer to installation manual.

Technical data

Certifications & regulations

IP Class	X6
USPH	Yes

Dimensions & weight

Width, net (mm)	1000
Depth, net (mm)	1400
Height, net (mm)	900
Weight, net (kg)	400
Weight, gross (kg)	414
Volume, net (m3)	1.26
Volume, gross (m3)	1.64

Electric

Voltage (V)	440
Phase	3
Has neutral	No
Frequency (Hz)	60
Connection Cable, length (m)	11
Loading (kW)	30.6
Max Amps in Phase (A)	40.2
Plug type	None
Connection height, electric (mm)	200

Functions & appearance

Capacity (L)	200
Marine feet	Yes
Installation, type	Floor Model
Noise level < (dB)	70
Tilting, type	Electric

General data

Country of origin	Italy
Variant Model Number	PBOT20RD

Water

Loipart AB (HQ), **Sweden**
Tel: +46 313 920 100, loipart@loipart.com

LMG Finland Oy, **Finland**
Tel: +358 40 664 6680, lmg@lmg.fi

Loipart USA Inc., **USA**
Tel: +1 954 530 5276, loipartusa@loipart.com

Loipart SEA Pte Ltd, **Singapore**
Tel: +65 670 99 100, contact@loipart.sg

Cold water inlet, diameter (")	G 1/2
Connection height, water (mm)	200
Hot water inlet, diameter (")	G 1/2
Pressure (Bar)	0.1
Pressure, max (Bar)	1.5
Water pressure, max (Bar)	6
Water pressure, min (Bar)	1.7

Included in delivery

1 pc of Emergency stop button - factory fitted.

Loipart AB (HQ), **Sweden**
Tel: +46 313 920 100, loipart@loipart.com

LMG Finland Oy, **Finland**
Tel: +358 40 664 6680, lmg@lmg.fi

Loipart USA Inc., **USA**
Tel: +1 954 530 5276, loipartusa@loipart.com

Loipart SEA Pte Ltd, **Singapore**
Tel: +65 670 99 100, contact@loipart.sg

DIMENSIONS

FRONT

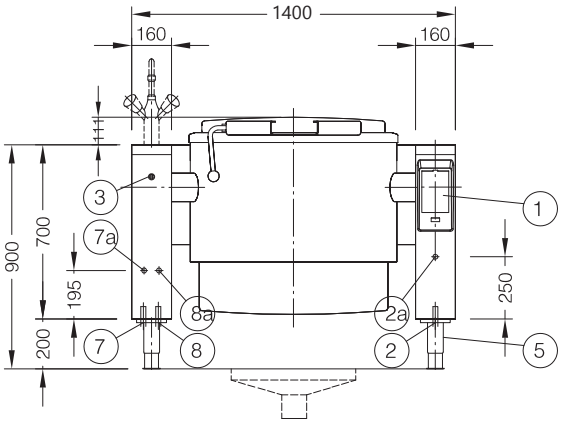

SIDE

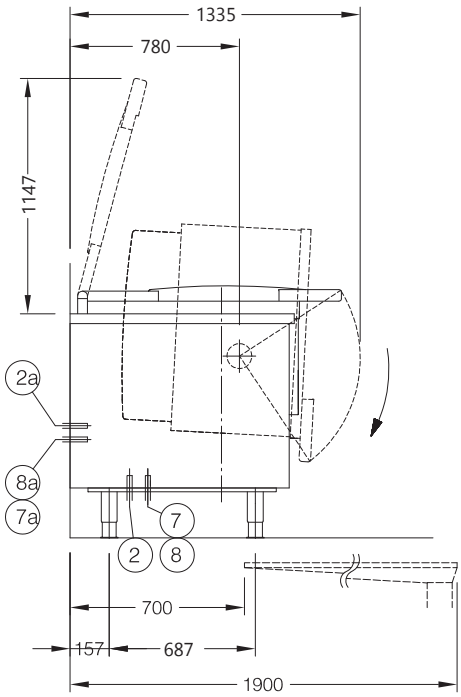

TOP

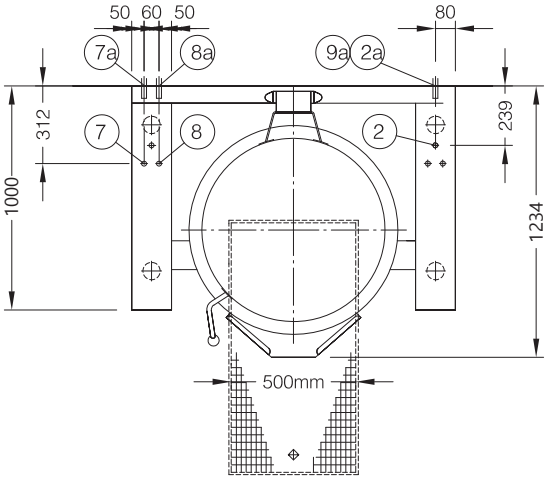

1. Control panel
2. Electrical connection

2a. Alt. electrical connection

3. Motor tilting control
4. Floor drain (optional)
5. Marine legs, adjustable
6. Mixing battery - not included. If supplied, following connections (water pressure 2-6 bar) are to be provided (see separate installation manual)
7. Hot water connection, G1/2" (NW15) 7a. Alt. hot water connection, G1/2" (NW15)
8. Cold water connection, G1/2" (NW15) 8a. Alt. cold water connection, G1/2" (NW15)

8a. Alt cold water connection, G1/2" (NW15)

BOTTOM

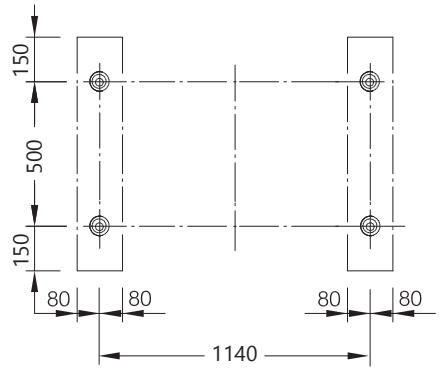

Marine foot must be welded to the floor.
Please see installation manual.

DETAIL MARINE FEET

