Electrolux PROFESSIONAL

High Productivity Cooking Steam Tilting Boiling Pan, 200lt Freestanding, Hygienic profile - Electronic-Marine

ITEM #

MODEL #

NAME #

SIS #

AIA #



587182 (PBOT20SDJO) Steam tilting Boiling Pan with electronic steam control 200lt, freestanding - Marine

Short Form Specification

Item No.

AISI 304 stainless steel construction. Deep drawn vessel in AISI 316 stainless steel. Insulated and counterbalanced lid. Motorized tilting with variable speed control. Pan can be tilted beyond 90° to completely empty the food. Food is uniformly heated via the base and the side walls of the pan by an indirect heating system using integrally generated saturated steam at a maximum temperature of 125°C in a jacket with an automatic deaeration system. Safety valve avoids overpressure of the steam in the jacket. Safety thermostat protects against low water level in the double jacket. TOUCH control panel. Possibility to store recipes in single or multiphase cooking process, with different temperature settings. Built in temperature sensors for precise control of cooking process. IPX6 water resistant. Configuration: Free-standing or Standing against a wall. Installation options (not included): floor mounted on 200mm high feet or a plinth which can be either steel or masonry construction.

APPROVAL:

Main Features

- Kettle is suitable to boil, steam, poach, braise or simmer all kinds of produce.
- Produce is uniformly heated in the vessel by an indirect heating system using saturated steam.
- Kettle is jacketed up to 134 mm from upper rim.
- Isolated upper well rim avoids risk of harm for the user.
- Max pressure of inner jacket at 1,5 bar; minimum working pressure at 0.5 bar.
- Ergonomic vessel dimensions, with a large diameter and shallow depth facilitates stirring and gentle food handling.
- Edge of the large pouring lip can be equipped with a strainer (option).
- Built in temperature sensor to precisely control the cooking process.
- Motorized, variable pan tilting with "SOFT STOP". Tilting and pouring speeds can be precisely adjusted. Pan can be tilted over 90° to facilitate pouring and cleaning operations.
- USB connection to easily update the software, upload/download recipes and download HACCP data.
- IPX6 water resistant.
- Connectivity ready for real time access to connected appliances from remote and data monitoring (requires optional accessory – contact the Company for more details).

Construction

- Cooking vessel in 1.4435 (AISI 316L) stainless steel featuring directional pouring lip. Double-jacket in 1.4404 (AISI 316L) stainless steel designed to operate at a pressure of 1.5 bar.
- External panelling and internal frame made of 1.4301 (AISI 304) stainless steel.
- Double-lined insulated lid in 1.4301 (AISI 304) stainless steel mounted on the cross beam of the unit, counterbalanced by a hinge that remains open in all positions.
- Safety valve avoids overpressure of the steam in the double jacket.
- External steam feeding; 1,5 bars working pressure.
- Safety thermostat protects against low water level in the double jacket.
- Water mixing tap is available as optional accessory to make water filling and pan cleaning easier.
- Ergonomic and user friendly thanks to the high tilting position and the pouring lip design which allow to easily fill containers.
- Front-mounted inclined led "TOUCH" control

Electrolux PROFESSIONAL

High Productivity Cooking Steam Tilting Boiling Pan, 200lt Freestanding, Hygienic profile - Electronic-Marine

panel with recessed deep drawn casing, features self-explanatory display functions which guide operator throughout the cooking process: simultaneous display of actual and set temperature as well as set cooking time and remaining cooking time; real time clock; "SOFT" control for gentle heating up for delicate food; 9 power simmering levels from gentle to heavy boiling; timer for deferred start; error display for quick trouble-shooting.

- Minimised presence of narrow gaps for easier cleaning of the sides to meet the highest hygiene standards.
- Can be prearranged for energy optimisation or external surveillance systems (optional).
- Possibility to store recipes in single or multiphase cooking process, with different temperature settings.
- 98% recyclable by weight; packaging material free of toxic substances.

Included Accessories

- 1 of Rear closing kit for tilting units - against wall - factory fitted — PNC 912703

Optional Accessories

- Strainer for 200lt round tilting boiling pans — PNC 910005 ❑
- Basket for 200lt round boiling pans (diam. 760mm) — PNC 910025 ❑
- Base plate for 200lt boiling pans — PNC 910035 ❑
- Measuring rod for 200lt tilting boiling pans — PNC 910046 ❑
- Strainer for dumplings for 200lt tilting boiling pans — PNC 910056 ❑
- Scraper for dumpling strainer for boiling and braising pans — PNC 910058 ❑
- Food tap strainer rod for stationary round boiling pans — PNC 910162 ❑
- FOOD TAP STRAINER - PBOT — PNC 911966 ❑
- C-board (length 1400mm) for tilting units - factory fitted — PNC 912186 ❑
- Power Socket, CEE16, built-in, 16A/400V, IP67, red-white - factory fitted — PNC 912468 ❑
- Power Socket, CEE32, built-in, 32A/400V, IP67, red-white - factory fitted — PNC 912469 ❑
- Power Socket, SCHUKO, built-in, 16A/230V, IP68, blue-white - factory fitted — PNC 912470 ❑
- Power Socket, TYP23, built-in, 16A/230V, IP55, black - factory fitted — PNC 912471 ❑
- Power Socket, TYP25, built-in, 16A/400V, IP55, black - factory fitted — PNC 912472 ❑
- Power Socket, SCHUKO, built-in, 16A/230V, IP55, black - factory fitted — PNC 912473 ❑
- Power Socket, CEE16, built-in, 16A/230V, IP67, blue-white - factory fitted — PNC 912474 ❑
- Power Socket, TYP23, built-in, 16A/230V, IP54, blue - factory fitted — PNC 912475 ❑
- Power Socket, SCHUKO, built-in, 16A/230V, IP54, blue - factory fitted — PNC 912476 ❑
- Power Socket, TYP25, built-in, 16A/400V, IP54, red-white - factory fitted — PNC 912477 ❑
- Panelling for plinth recess (depth from 70 to 270mm) for tilting units - factory fitted (Deutschland, Austria, Switzerland) - factory fitted — PNC 912479 ❑
- Manometer for tilting boiling pans - factory fitted — PNC 912490 ❑
- Rear closing kit for tilting units - against wall - factory fitted — PNC 912706 ❑
- Automatic water filling for tilting units (cold) - to be ordered with water mixer - factory fitted — PNC 912733 ❑
- Automatic water filling (hot and cold) for tilting units - to be ordered with water mixer - factory fitted — PNC 912735 ❑
- Kit energy optimization and potential free contact - factory fitted — PNC 912737 ❑
- Mainswitch 25A, 2.5mm² - factory fitted — PNC 912739 ❑
- Rear closing kit for tilting units - island type - factory fitted — PNC 912746 ❑
- Lower rear backpanel for tilting units with or without backsplash - factory fitted — PNC 912770 ❑
- Spray gun for tilting units - freestanding (height 700mm) - factory fitted — PNC 912776 ❑
- Food tap 2" for tilting boiling pans (PBOT) - factory fitted — PNC 912779 ❑
- External touch control device for tilting units - factory fitted — PNC 912782 ❑
- Emergency stop button - factory fitted — PNC 912784 ❑
- Mixing tap with drip stop, two knobs, 815mm height, 600mm swivelling depth for PBOT/PFET - factory fitted — PNC 913554 ❑
- Mixing tap with drip stop, two knobs, 815mm height, 450mm swivelling depth for PBOT/PFET - factory fitted — PNC 913555 ❑
- Mixing tap with drip stop, two knobs, 685mm height, 600mm swivelling depth for PBOT/PFET - factory fitted — PNC 913556 ❑
- Mixing tap with drip stop, two knobs, 685mm height, 450mm swivelling depth for PBOT/PFET - factory fitted — PNC 913557 ❑
- Mixing tap with drip stop, one lever, 815mm height, 600mm swivelling depth for PBOT/PFET - factory fitted — PNC 913558 ❑
- Mixing tap with drip stop, one lever, 815mm height, 450mm swivelling depth for PBOT/PFET - factory fitted — PNC 913559 ❑
- Mixing tap with drip stop, one lever, 685mm height, 600mm swivelling depth for PBOT/PFET - factory fitted — PNC 913560 ❑
- Mixing tap with drip stop, one lever, 685mm height, 450mm swivelling depth for PBOT/PFET - factory fitted — PNC 913561 ❑
- Mixing tap with two knobs, 520mm height, 600mm swivelling depth for PXXT- KWC - factory fitted — PNC 913567 ❑
- Mixing tap with one lever, 564mm height, 450mm swivelling depth for PXXT- KWC - factory fitted — PNC 913568 ❑
- Connectivity kit for ProThermetic Boiling and Braising Pans ECAP - factory fitted — PNC 913577 ❑

The company reserves the right to make modifications to the products without prior notice. All information correct at time of printing.

High Productivity Cooking
Steam Tilting Boiling Pan, 200lt Freestanding, Hygienic profile - Electronic-Marine

Front

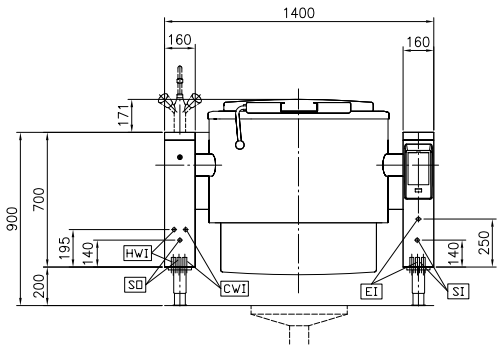

Side

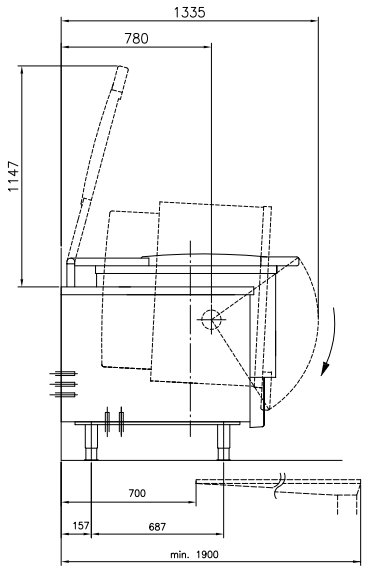

CWI1 = Cold Water inlet 1 (cleaning)
EI = Electrical inlet (power)
HWI = Hot water inlet
SI = Steam inlet
SO = Steam outlet

Top

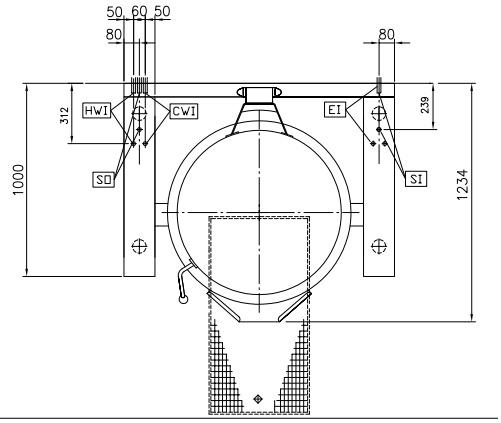

Electric

Supply voltage:	
587182 (PBOT20SDJO)	230 V/1 ph/50/60 Hz
Total Watts:	0.2 kW

Steam

Steam generation:	External source
Steam inlet size:	1"
Steam consumption:	85 kg/hr
Steam pressure Max:	1.5 bar
Steam supply, relative dynamic pressure:	1 min bar, 1.5 max bar

Water:

Pressure, bar min/max:	2-6 bar

Installation:

Type of installation:	FS on concrete base;FS on feet;On base;Standing against wall

Key Information:

Configuration:	Round;Tilting
Working Temperature MIN:	50 °C
Working Temperature MAX:	110 °C
Vessel (round) diameter:	800 mm
Vessel (round) depth:	490 mm
External dimensions, Width:	1400 mm
External dimensions, Depth:	1000 mm
External dimensions, Height:	700 mm
Net weight:	360 kg
Net vessel useful capacity:	200 lt
Tilting mechanism:	Automatic
Double jacketed lid:	✓
Heating type:	Indirect

The company reserves the right to make modifications to the products without prior notice. All information correct at time of printing.

2022.12.12