

Boiling Pan 300 L, Prearranged For Stirrer, Wallmounted

Model: PBOT30RW • Article no: 587165

Power supply: 440V 3Ph ~60Hz

A boiling pan suitable to boil, steam, poach, braise or simmer all kinds of produce. Ergonomic vessel dimensions, with a large diameter and shallow depth that facilitate stirring and gentle food handling. The pan has a motorized, variable pan tilting and "SOFT STOP." Tilting and pouring speeds can be precisely adjusted, and the pan can be tilted over 90° to facilitate pouring and cleaning operations.

The food is uniformly heated via the base and the side walls of the pan by an indirect heating system. The system uses integrally generated saturated steam at a maximum temperature of 125° C in a jacket with an automatic deaeration system. The safety valve avoids overpressure of the steam in the jacket, and the safety thermostat protects against low water level in the double jacket.

The pan has a touch control panel that can store recipes in the single or multiphase cooking process, with different temperature settings. The built-in temperature sensors enable precise control of the cooking process.

MAIN FEATURES

- Motorized tilting with soft stop
- IPX6 water-resistant
- Kettle is jacketed up to 134 mm from the upper rim
- Built-in temperature sensor
- USB connection to easily update the software, upload recipes and download HACCP data

PBOT30RW, 587165
9/30/2026 3:34 PM

Subject to change without notice.
For correct installation, refer to installation manual.

Technical data

Certifications & regulations

IP Class	X6
USPH	Yes

Dimensions & weight

Width, net (mm)	1000
Depth, net (mm)	1500
Height, net (mm)	400
Weight, net (kg)	430
Weight, gross (kg)	445
Volume, net (m3)	0.6
Volume, gross (m3)	0.78

Electric

Voltage (V)	440
Phase	3
Has neutral	No
Frequency (Hz)	60
Connection Cable, length (m)	14
Loading (kW)	36.6
Max Amps in Phase (A)	48
Plug type	None
Connection height, electric (mm)	450

Functions & appearance

Capacity (L)	300
Marine feet	No
Installation, type	Wall Mounted Model
Noise level < (dB)	70
Tilting, type	Electric

General data

Country of origin	Italy
Variant Model Number	PBOT30RW

Water

Cold water inlet, diameter (")	G 1/2
Connection height, water (mm)	395
Hot water inlet, diameter (")	G 1/2
Pressure (Bar)	0.1
Pressure, max (Bar)	1.5
Water pressure, max (Bar)	6
Water pressure, min (Bar)	1.7

Included in delivery

1 pc of Emergency stop button - factory fitted.

Loipart AB (HQ), **Sweden**
Tel: +46 313 920 100, loipart@loipart.com

LMG Finland Oy, **Finland**
Tel: +358 40 664 6680, lmg@lmg.fi

Loipart USA Inc., **USA**
Tel: +1 954 530 5276, loipartusa@loipart.com

Loipart SEA Pte Ltd, **Singapore**
Tel: +65 670 99 100, contact@loipart.sg

DIMENSIONS

FRONT

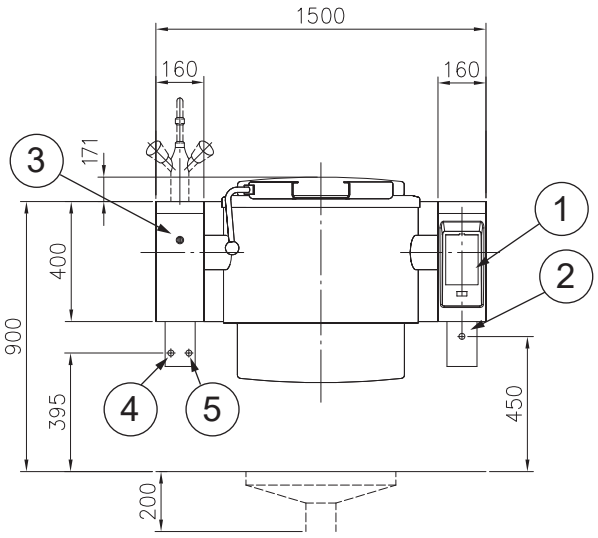

SIDE

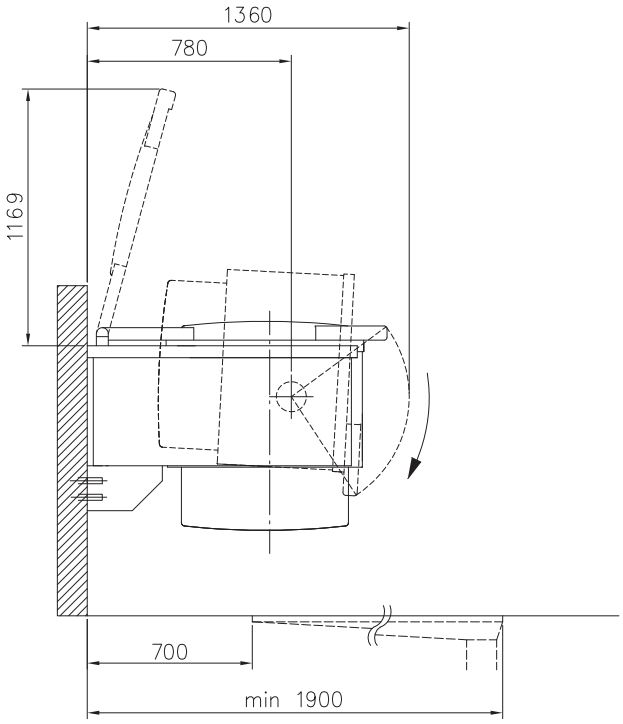

TOP

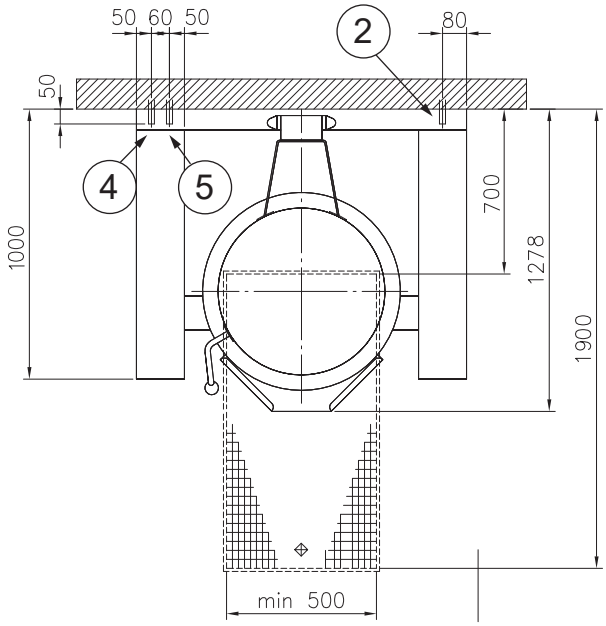

1. Control panel
2. Electrical connection
3. Motor tilting control
4. Hot water connection, G1/2" (NW15)
5. Cold water connection, G1/2" (NW15)
6. Wall attachment points

LOIPART

DIMENSIONS

WALL INSTALLATION POINTS

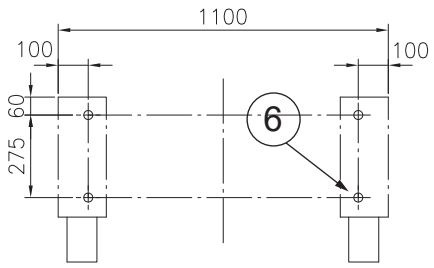

Wall installation

Before you start, prepare the mounting holes in the wall according to the specifications in the mounting diagram.

1. Use the supplied wall anchors with the threaded rods **A**. The holes must have a diameter of 18 mm [0,71″] and a minimum depth of 145 mm [5,71″].
   Wall anchors with long threaded rods must be positioned at the top, those with short rods must be positioned at the bottom.
2. Clean the hole after drilling.
3. Tighten wall anchor nuts **B** to a torque of 80 Nm.
4. Then fit nuts **C** and washers **G** and screw in the supporting bracket **E** at a distance of 30 mm [1,18″].
5. Align all support brackets **E** correctly.
6. Level the set screws **F** in the support brackets **E**.
7. Lift the unit on the wall anchor threaded bolts and level it using a spirit level.
8. Finally fix it with washers **G** and nuts **C** and fit the lock nut **D**.

