

Panini Grill - 2 Ribbed/Ribbed 515 mm

Model: PGRRD • Article no: 9B0122

Power supply: 230V 1Ph ~50/60Hz

The Electrolux PGRRD Sandwich Grill is a robust, high-performance appliance engineered for professional kitchens and foodservice environments. With its precision temperature control and rapid heat-up time, the model ensures consistent grilling results, making it ideal for preparing sandwiches, paninis, and other grilled items quickly and efficiently.

MAIN FEATURES

- Heavy-Duty Construction
- Dual Ribbed Plates
- Cast iron plates are covered by a vitreous enamel coating, making them scratch and rust-proof and ensuring hygiene.
- Adjustable thermostat with a temperature range of 50°C to 300°C
- Drip tray to collect all grease and crumbs
- Ergonomic design and small footprint
- Quick Recovery Time

PGRRD, 9B0122
9/30/2026 3:48 PM

Subject to change without notice.
For correct installation, refer to installation manual.

Technical data

Dimensions & weight

Width, net (mm)	515
Depth, net (mm)	435
Height, net (mm)	235
Weight, net (kg)	31
Weight, gross (kg)	38

Electric

Voltage (V)	230
Phase	1
Has neutral	No
Frequency (Hz)	50, 60
Loading (kW)	3.1

Functions & appearance

Griddle/Grill, type	Ribbed
Cooking surface, dimensions (mm)	500x255
Induction/ceramic zones, qty (pcs)	2
Installation, type	Table Top Model

General data

Country of origin	Italy
Variant Model Number	PGRRD

DIMENSIONS

FRONT

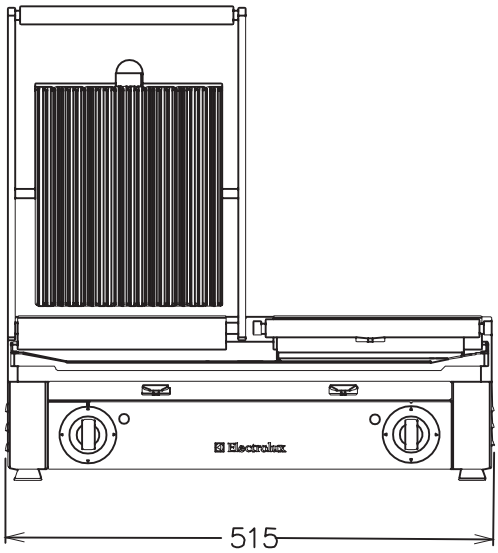

SIDE

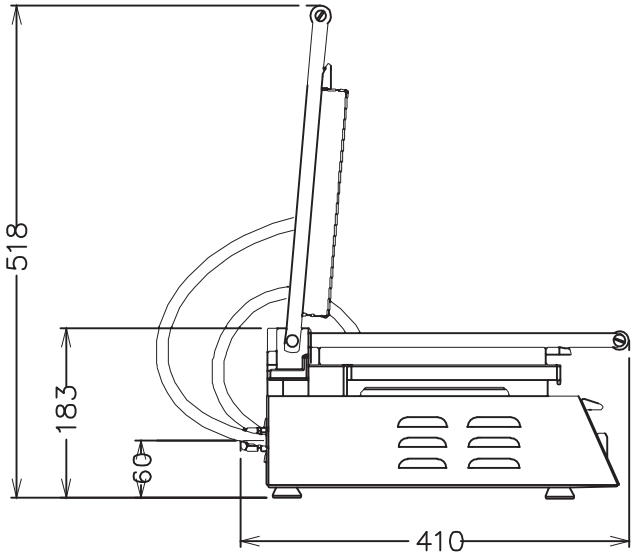

TOP

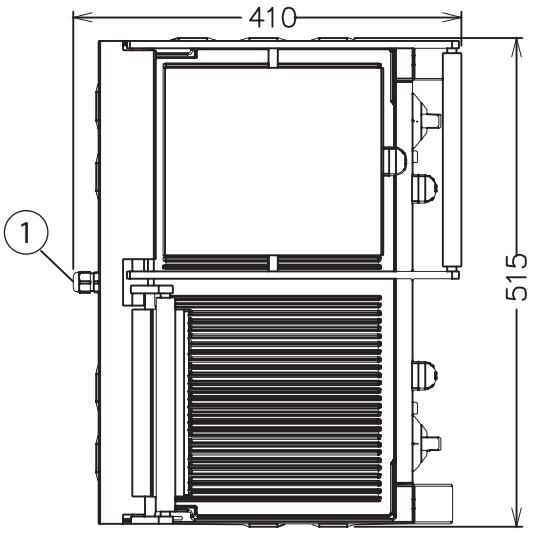

1. Electrical connection
   (1.0 m cable included)