Electrolux PROFESSIONAL

High Productivity Cooking Electric Tilting Pressure Braising Pan, 90lt Hygienic Profile, Freestanding with CTS-Marine

ITEM #

MODEL #

NAME #

SIS #

AIA #



587142 (PUET09ECIO) Electric tilting Pressure Braising Pan 90lt with steam condensation function and core temperature sensor, freestanding - Marine

Short Form Specification

Item No.

AISI 304 stainless steel construction. GN compliant pan size; 18mm thick pan bottom (15mm mild steel and 3 mm AISI 316 stainless steel). Insulated and counterbalanced lid. Motorized tilting with variable speed control. Pan can be tilted beyond 90° to completely empty the food. The electric heating elements are mounted under the well. Safety thermostat protects the pan from overheating. A precise, electronic control of pan bottom temperature ensures fast reaction and exact adherence to preselected cooking temperatures between 50° and 250°C. Automatic steam elimination at the end of the cooking cycle. It can be used for poaching or steaming (with the lid open); simmering and boiling (with open or closed lid); pressure cooking of multiple produces possible thanks to the use of suspended GN 1/1 containers. TOUCH control panel. SOFT function. PRESSURE function. Possibility to store recipes in single or multiphase cooking process, with different temperature settings. Built in temperature sensors for precise control of cooking process. Core Temperature Sensor provides efficient temperature control. IPX6 water resistant. Configuration: Free-standing or Standing against a wall. Installation options (not included): floor mounted on 200mm high feet or a plinth which can be either steel or masonry construction.

Main Features

- Multifunctional cooking appliance used for roasting, pot-roasting, braising, simmering, boiling, pressure cooking and steaming.
- Pan size is GN compliant.
- Easy to clean cooking surface due to large-radius edges and corners.
- Thermoblock heating system for optimal temperature distribution and high temperature stability.
- Pan bottom with two individually adjustable heating zones, each with a temperature sensor.
- Safety mechanism prevents lid from opening, even in case of voluntary attempt, when cooking under pressure.
- Temperature sensors provides efficient temperature control: the power is supplied as and when required to keep the set temperature value without exceeding it.
- Safety valve on the lid avoids overpressure in the food compartment.
- Cooking with a working pressure of 0.45 bar reduces cooking times.
- IPX6 water resistant.
- Optimum heat distribution in the food provides best cooking results in terms of taste, colour and consistency and in terms of vitamin preserving.
- Overnight cooking: saving electricity and time.
- High-quality thermal insulation of the pan saves energy and keeps operating ambient temperature low.
- Motorized, variable pan tilting with "SOFT STOP". Tilting and pouring speeds can be precisely adjusted. Pan can be tilted over 90° to facilitate pouring and cleaning operations.
- "Pressure function": once the pressure lid is locked, the system automatically regulates itself.
- Built in temperature sensor to precisely control the cooking process.
- Core Temperature Sensor (CTS): multi-sensor food probe, 6 sensors, 0,5 °C accuracy, provides efficient temperature control. The power is supplied as and when required to keep the set temperature value without exceeding it and once reached, the food is ready to be served.
- No overshooting of cooking temperatures, fast reaction.
- USB connection to easily update the software, upload/download recipes and download HACCP data.
- Connectivity ready for real time access to connected appliances from remote and data

APPROVAL:

Electrolux PROFESSIONAL
High Productivity Cooking Electric Tilting Pressure Braising Pan, 90lt Hygienic Profile, Freestanding with CTS-Marine

monitoring (requires optional accessory – contact the Company for more details).

Construction

- External panelling and internal frame made of 1.4301 (AISI 304) stainless steel.
- Multipurpose non-stick cooking surface in 18 mm thick compound: 3 mm shot-blasted 1.4404 (AISI 316L) stainless steel surface, seamlessly welded to the mild steel bottom.
- Entire pan tub made in 1.4301 (AISI 304) stainless steel, single-piece deep drawn.
- Double-lined insulated lid in 1.4301 (AISI 304) stainless steel mounted on the cross beam of the unit, counterbalanced by a hinge that remains open in all positions.
- 15 mm thick heating layer concealed below the entire pan bottom, to provide high thermal diffusion and heat storage properties.
- Water mixing tap is available as optional accessory to make water filling and pan cleaning easier.
- Heatproof handle with non-slip surface.
- Front-mounted inclined led "TOUCH" control panel with recessed deep drawn casing, features self-explanatory display functions which guide operator throughout the cooking process: simultaneous display of actual and set temperature as well as set cooking time and remaining cooking time; real time clock; "SOFT" control for gentle heating up for delicate food; 9 power simmering levels from gentle to heavy boiling; timer for deferred start; error display for quick trouble-shooting.
- Pressure lid fitted with a proven fast-acting lock which is simple and safe in operation.
- "Boiling" or "Braising" mode functions.
- Minimised presence of narrow gaps for easier cleaning of the sides to meet the highest hygiene standards.
- Can be prearranged for energy optimisation or external surveillance systems (optional).
- 98% recyclable by weight; packaging material free of toxic substances.

Included Accessories

- 1 of Rear closing kit for tilting units - against wall - factory fitted PNC 912703

Optional Accessories

- Strainer for dumplings for all tilting & stationary braising and pressure braising pans (except 80lt) and for all stationary rectangular and 100lt round boiling pans PNC 910053 ❑
- Scraper for dumpling strainer for boiling and braising pans PNC 910058 ❑
- Suspension frame GN1/1 for rectangular boiling and braising pans PNC 910191 ❑
- Base plate 1/1 GN for braising pans PNC 910201 ❑
- Perforated container with handles 1/1GN (height=100mm) for boiling and braising pans PNC 910211 ❑
- Perforated container with handles 1/1GN (height 150mm) for boiling and braising pans PNC 910212 ❑
- Small perforated shovel for braising pans (PFEN/PUEN) PNC 911577 ❑
- Small shovel for braising pans (PFEN/PUEN) PNC 911578 ❑
- Perforated container with handles 1/1GN (height 200mm) for boiling and braising pans PNC 911673 ❑
- C-board (length 1200mm) for tilting units - factory fitted PNC 912184 ❑
- Power Socket, CEE16, built-in, 16A/400V, IP67, red-white - factory fitted PNC 912468 ❑
- Power Socket, CEE32, built-in, 32A/400V, IP67, red-white - factory fitted PNC 912469 ❑
- Power Socket, SCHUKO, built-in, 16A/230V, IP68, blue-white - factory fitted PNC 912470 ❑
- Power Socket, TYP23, built-in, 16A/230V, IP55, black - factory fitted PNC 912471 ❑
- Power Socket, TYP25, built-in, 16A/400V, IP55, black - factory fitted PNC 912472 ❑
- Power Socket, SCHUKO, built-in, 16A/230V, IP55, black - factory fitted PNC 912473 ❑
- Power Socket, CEE16, built-in, 16A/230V, IP67, blue-white - factory fitted PNC 912474 ❑
- Power Socket, TYP23, built-in, 16A/230V, IP54, blue - factory fitted PNC 912475 ❑
- Power Socket, SCHUKO, built-in, 16A/230V, IP54, blue - factory fitted PNC 912476 ❑
- Power Socket, TYP25, built-in, 16A/400V, IP54, red-white - factory fitted PNC 912477 ❑
- Panelling for plinth recess (depth from 70 to 270mm) for tilting units - factory fitted (Deutschland, Austria, Switzerland) - factory fitted PNC 912479 ❑
- Additional panelling plinth for tilting units (width 120mm) - factory fitted (Deutschland, Austria, Switzerland) PNC 912486 ❑
- Connecting rail kit for appliances with backsplash, 900mm PNC 912499 ❑
- Connecting rail kit, 900mm PNC 912502 ❑
- Rear closing kit for tilting units - against wall - factory fitted PNC 912704 ❑
- Automatic water filling for tilting units (cold) - to be ordered with water mixer - factory fitted PNC 912733 ❑

The company reserves the right to make modifications to the products without prior notice. All information correct at time of printing.

- Automatic water filling (hot and cold) for tilting units - to be ordered with water mixer - factory fitted PNC 912735 ❑
- Kit energy optimization and potential free contact - factory fitted PNC 912737 ❑
- Rear closing kit for tilting units - island type - factory fitted PNC 912744 ❑
- Lower rear backpanel for tilting units with or without backsplash - factory fitted PNC 912768 ❑
- Mainswitch 25A, 4mm² - factory fitted PNC 912773 ❑
- Spray gun for tilting units - freestanding (height 700mm) - factory fitted PNC 912776 ❑
- Food tap 2" for tilting braising pans (PUET-PFET) - factory fitted PNC 912780 ❑
- External touch control device for tilting units - factory fitted PNC 912782 ❑
- Emergency stop button - factory fitted PNC 912784 ❑
- Connecting rail kit: modular 90 (on the left) to ProThermetic tilting (on the right), ProThermetic stationary (on the left) to ProThermetic tilting (on the right) PNC 912975 ❑
- Connecting rail kit: modular 80 (on the right) to ProThermetic tilting (on the left), ProThermetic stationary (on the right) to ProThermetic tilting (on the left) PNC 912976 ❑
- Connecting rail kit for appliances with backsplash: modular 90 (on the left) to ProThermetic tilting (on the right), ProThermetic stationary (on the left) to ProThermetic tilting (on the right) PNC 912981 ❑
- Connecting rail kit for appliances with backsplash: modular 90 (on the right) to ProThermetic tilting (on the left), ProThermetic stationary (on the right) to ProThermetic tilting (on the left) PNC 912982 ❑
- Scraper without handle for braising pans (PFEX/PUEX) PNC 913431 ❑
- Scraper with vertical handle for braising pans (PFEX/PUEX) PNC 913432 ❑
- Mixing tap with drip stop, two knobs, 685mm height, 600mm swivelling depth for PUET - factory fitted PNC 913565 ❑
- Mixing tap with drip stop, one lever, 685mm height, 600mm swivelling depth for PUET - factory fitted PNC 913566 ❑
- Mixing tap with two knobs, 520mm height, 600mm swivelling depth for PXXT- KWC - factory fitted PNC 913567 ❑
- Mixing tap with one lever, 564mm height, 450mm swivelling depth for PXXT- KWC - factory fitted PNC 913568 ❑
- Strainer for tilting pressure braising pan, 2 GN (60/90l) PNC 913575 ❑
- Connectivity kit for ProThermetic Boiling and Braising Pans ECAP - factory fitted PNC 913577 ❑

The company reserves the right to make modifications to the products without prior notice. All information correct at time of printing.

High Productivity Cooking
Electric Tilting Pressure Braising Pan, 90lt
Hygienic Profile, Freestanding with CTS-Marine

Front

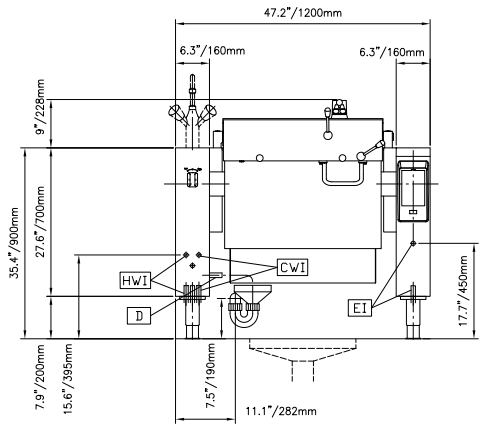

Side

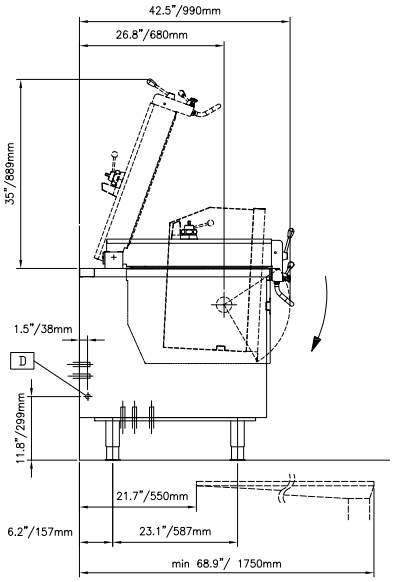

CWI1 = **Cold Water inlet 1 (cleaning)**
EI = **Electrical inlet (power)**
HWI = **Hot water inlet**

Top

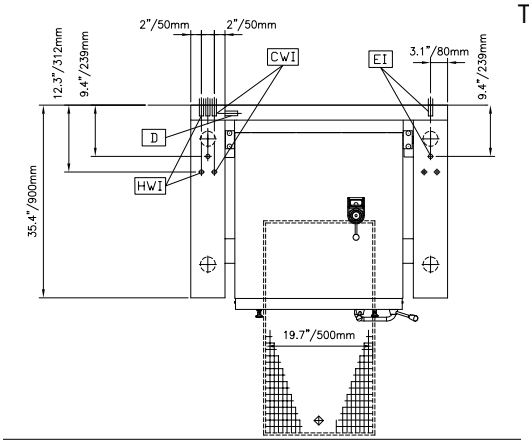

Electric

Supply voltage:	
587142 (PUET09ECIO)	440 V/3 ph/50/60 Hz
Total Watts:	15.5 kW
Also available with 400 V/3 ph/50 Hz	

Installation:

Type of installation:	FS on concrete base;FS on feet;On base;Standing against wall

Key Information:

Configuration:	Rectangular;Tilting
Working Temperature MIN:	50 °C
Working Temperature MAX:	250 °C
Vessel (rectangle) width:	680 mm
Vessel (rectangle) height:	274 mm
Vessel (rectangle) depth:	558 mm
External dimensions, Width:	1200 mm
External dimensions, Depth:	900 mm
External dimensions, Height:	700 mm
Net weight:	240 kg
Net vessel useful capacity:	90 lt
Tilting mechanism:	Automatic
Double jacketed lid:	✓
Heating type:	Direct

The company reserves the right to make modifications to the products without prior notice. All information correct at time of printing.

2022.12.12