

Combi Oven Skyline Premium 6 GN 1/1

Model: ECOE61B3F30 • Article no: 227838

Power supply: 480V 3Ph ~60Hz

The new SkyLine Combi Ovens are designed to deliver outstanding performance through innovative technology and a human-centered approach.

The Premium models feature a digital interface with LED-backlit buttons and a guided selection process. They include a built-in steam generator for precise humidity and temperature control, as well as a Lambda sensor core probe that automatically detects the quantity and size of the food to ensure consistent quality results. A single-sensor core temperature probe is included.

SkyLine models feature a wing-shaped ergonomic handle with hands-free opening, allowing easier tray handling using the elbow. They are equipped with a triple thermo-glazed door featuring an open-frame construction to keep the outer panel cool. The swing-hinged, easy-release inner glass allows quick cleaning, while the seamless hygienic cooking chamber—with rounded corners and 304 AISI stainless steel construction—ensures maximum hygiene and durability.

The oven incorporates the OptiFlow air distribution system, designed to achieve optimal cooking evenness and temperature control. This is made possible by the combination of the chamber's design, a venting valve, and a high-precision variable-speed fan. The fan offers five speed levels (300–1500 RPM) and reverse rotation

MAIN FEATURES

- Digital interface
- Human-centred design with 4-star certification for ergonomics and usability
- Boiler in 316L AISI to protect against corrosion
- Patented lambda sensor for humidity control
- Labeled with Energy Star for energy efficiency
- OptiFlow air distribution system
- Fixed tray rack pitch 67mm with tray stopper
- Triple-glass door
- Skyclean automatic cleaning

ECOE61B3F30, 227838
9/30/2026 2:55 PM

Subject to change without notice.
For correct installation, refer to installation manual.

for improved consistency. It also stops in less than five seconds when the door is opened. Additional features include automatic fast cool-down, preheat, and reduced power functions, enabling customized slow-cooking cycles.

Up to 1,000 recipes can be stored in the oven’s memory, allowing you to recreate the same results at any time. Recipes can be organized into 16 categories for easier access and management.

Subject to change without notice.
For correct installation, refer to installation manual.

Technical data

Certifications & regulations

Certifications	CE, Ergocert
IP Class	X5

Dimensions & weight

Width, net (mm)	867
Depth, net (mm)	775
Height, net (mm)	808
Weight, net (kg)	117
Weight, gross (kg)	137
Volume, net (m3)	0.54

Electric

Voltage (V)	480
Phase	3
Has neutral	No
Frequency (Hz)	60
Connection Cable, length (m)	0
Connector side	Bottom
Loading (kW)	11.1
Max Amps in Phase (A)	13.4
Plug type	None

Functions & appearance

Capacity, pans (pcs)	6
Automatic cleaning system	Yes
Marine feet	Yes
Installation, type	Floor Model, Table Top Model
Noise level < (dB)	70
Oven, type	Combi
Temperature, max (°C)	300

General data

Country of origin	Italy
Variant Model Number	ECOE61B3F30

Loipart AB (HQ), **Sweden**
Tel: +46 313 920 100, loipart@loipart.com

LMG Finland Oy, **Finland**
Tel: +358 40 664 6680, lmg@lmg.fi

Loipart USA Inc., **USA**
Tel: +1 954 530 5276, loipartusa@loipart.com

Loipart SEA Pte Ltd, **Singapore**
Tel: +65 670 99 100, contact@loipart.sg

Water

Cold water inlet, diameter (")	3/4
Drain pipe, diameter (mm)	50
Cold water inlet temperature (°C)	max 30
Water pressure, max (Bar)	4.5
Water pressure, min (Bar)	1

Other information

The oven requires regular cleaning cycles using C22 Cleaning Tabs (0S2395) and the C25-Rinse & Descale Tab (0S2394). Regular use helps keep the equipment clean, ensures optimal performance, and supports compliance with applicable warranty conditions.

Loipart AB (HQ), **Sweden**
Tel: +46 313 920 100, loipart@loipart.com

LMG Finland Oy, **Finland**
Tel: +358 40 664 6680, lmg@lmg.fi

Loipart USA Inc., **USA**
Tel: +1 954 530 5276, loipartusa@loipart.com

Loipart SEA Pte Ltd, **Singapore**
Tel: +65 670 99 100, contact@loipart.sg

DIMENSIONS

FRONT

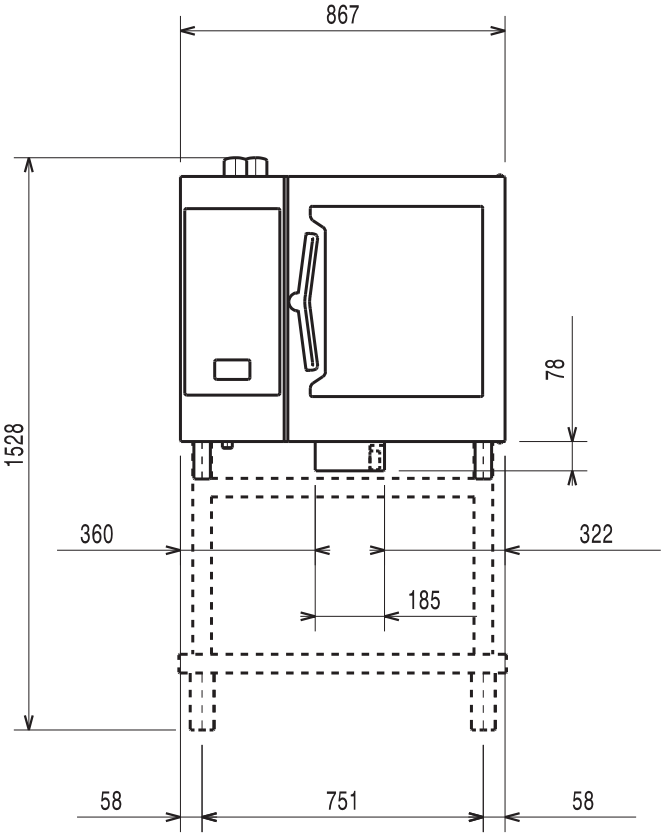

SIDE

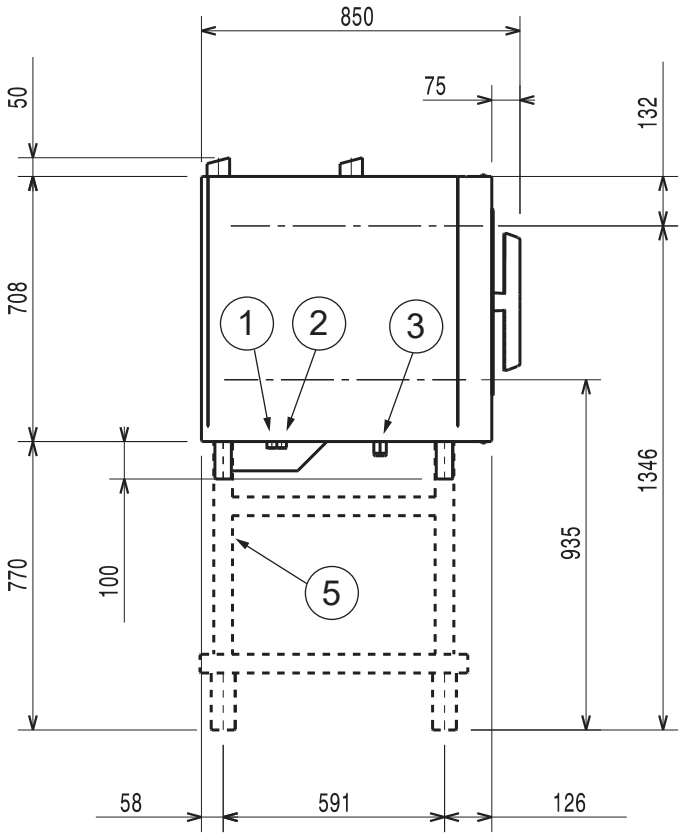

TOP

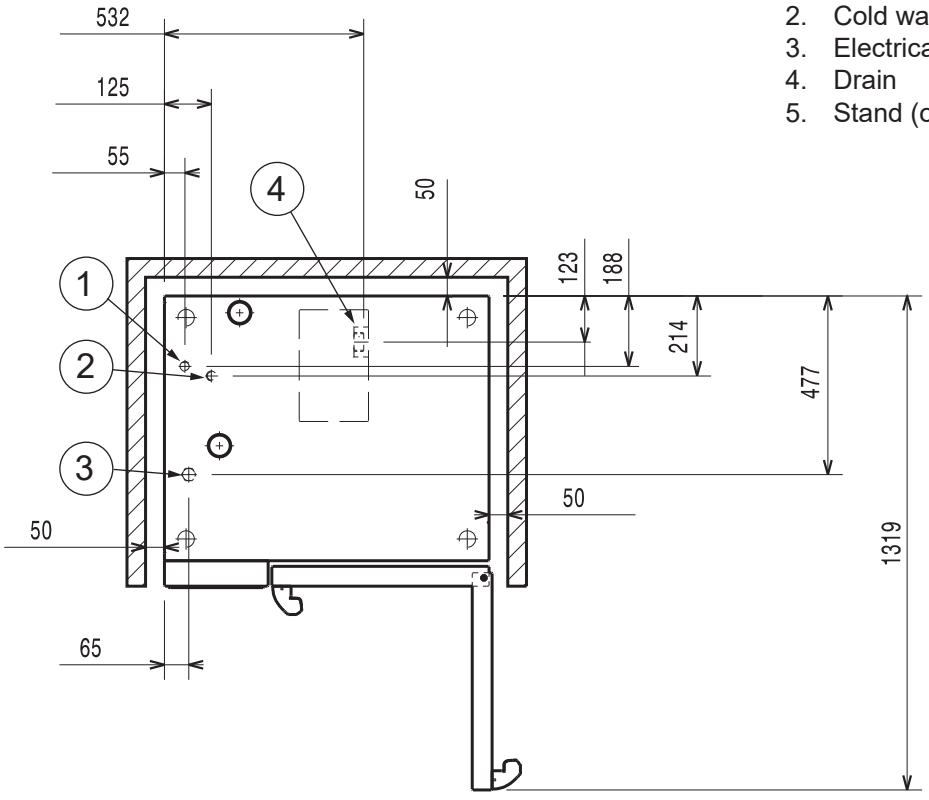

1. Cold water inlet (cleaning system)
2. Cold water inlet (boiler/steam generator)
3. Electrical connection
4. Drain
5. Stand (optional extras)

DETAIL MARINE FOOT

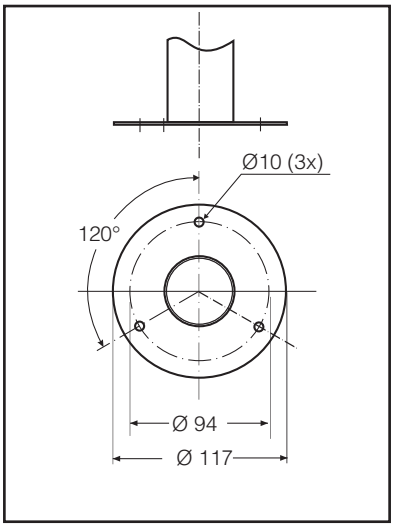

POSITIONING OF MACHINE

normal working	right / left / rear distance 50 mm
work close to heat source	left side distance 350 to 500 mm
service conditions	left side distance 500 mm

- All appliance sides must remain at 50 mm from any surface.

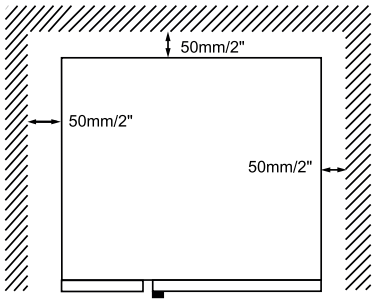

If it's necessary to carry out maintenance works on the appliance, slide it forwards.

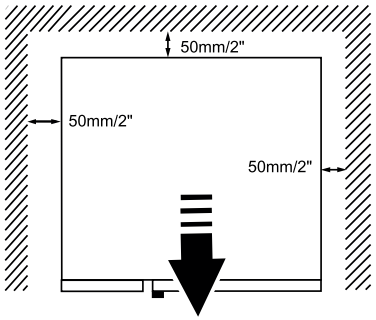

In all models but especially in 20 grids models when possible leave a space of at least 500 mm between the left side of the appliance and the other surfaces to enable maintenance operations.

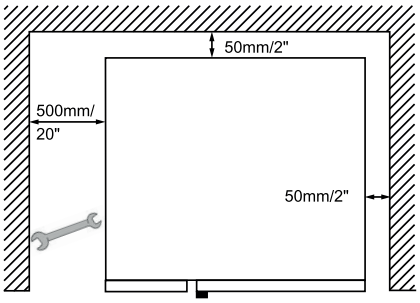

The left gap must be a minimum of 350 mm **if heat sources are acting** on the left side of the appliance.

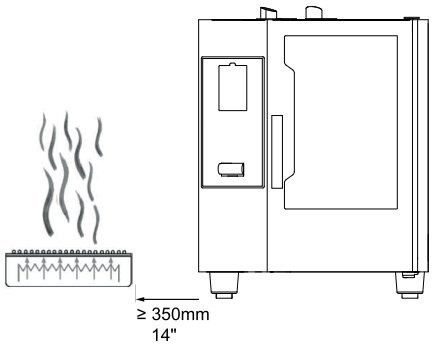

If it is not possible to keep the left side of the appliance a sufficient distance away from heat sources, a heat shield can reduce thermal loads (see accessories catalogue).

If steam from the ventilation pipe cannot be directed into an exhaust hood or a ventilating ceiling, there must be at least 500 mm clearance space above the device.

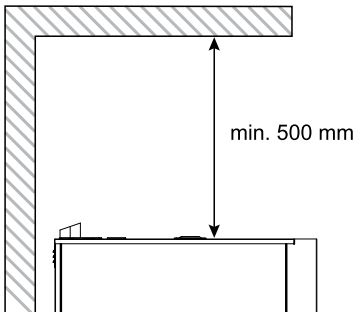

Position the appliance on a flat surface.

If necessary, adjust the height of the worktop by means of the adjustable feet (if available).