

Combi Oven Skyline Premium S 6 GN 2/1

Model: ECOE62T3D30 • Article no: 227719

Power supply: 440V 3Ph ~50-60Hz

SkyLine Combi Ovens deliver high performance through innovative technology and user-focused design. Premium S models feature a high-resolution, color-blind-friendly touchscreen and a built-in steam generator for precise humidity and temperature control. A Lambda sensor core probe automatically detects food amount and size, while a six-point multi-sensor core temperature probe maximizes precision and food safety.

The OptiFlow air distribution system ensures even cooking through a precision-engineered chamber, venting valve, and variable-speed fan with five speed levels (300–1500 RPM), reverse rotation, and a 5-second stop on door opening. Automatic fast cool-down, preheat, and reduced-power modes support customized slow-cooking cycles. The wing-shaped ergonomic handle allows hands-free opening, and the triple thermo-glazed door with open-frame construction keeps the outer panel cool. The swing-hinged inner glass and seamless 304 AISI stainless steel chamber with rounded corners ensure easy cleaning and long-term durability.

Up to 1,000 recipes can be stored and organized into 16 categories for consistent, repeatable results.

MAIN FEATURES

- Touch-screen
- Human-centred design with 4-star certification for ergonomics and usability
- Boiler in 316L AISI to protect against corrosion
- Patented lambda sensor for humidity control
- Labeled with Energy Star for energy efficiency
- OptiFlow air distribution system
- Fixed tray rack pitch 67mm with tray stopper
- Triple-glass door
- Skyclean automatic cleaning

ECOE62T3D30, 227719
9/30/2026 2:55 PM

Subject to change without notice.
For correct installation, refer to installation manual.

Technical data

Certifications & regulations

Certifications	CE, Ergocert
IP Class	X5

Dimensions & weight

Width, net (mm)	1090
Depth, net (mm)	971
Height, net (mm)	808
Weight, net (kg)	158
Weight, gross (kg)	178
Volume, net (m3)	0.86

Electric

Voltage (V)	440
Phase	3
Has neutral	No
Frequency (Hz)	50-60
Connection Cable, length (m)	0
Connector side	Bottom
Loading (kW)	22.3
Max Amps in Phase (A)	31.9
Plug type	None

Functions & appearance

Capacity, pans (pcs)	6
Automatic cleaning system	Yes
Marine feet	Yes
Installation, type	Floor Model, Table Top Model
Noise level < (dB)	70
Oven, type	Combi
Temperature, max (°C)	300

General data

Country of origin	Italy
Variant Model Number	ECOE62T3D30

Loipart AB (HQ), **Sweden**
Tel: +46 313 920 100, loipart@loipart.com

LMG Finland Oy, **Finland**
Tel: +358 40 664 6680, lmg@lmg.fi

Loipart USA Inc., **USA**
Tel: +1 954 530 5276, loipartusa@loipart.com

Loipart SEA Pte Ltd, **Singapore**
Tel: +65 670 99 100, contact@loipart.sg

Water

Cold water inlet, diameter (")	3/4
Drain pipe, diameter (mm)	50
Cold water inlet temperature (°C)	max 30
Water pressure, max (Bar)	4.5
Water pressure, min (Bar)	1

Other information

The oven requires regular cleaning cycles using C22 Cleaning Tabs (0S2395) and the C25-Rinse & Descale Tab (0S2394). Regular use helps keep the equipment clean, ensures optimal performance, and supports compliance with applicable warranty conditions.

Loipart AB (HQ), **Sweden**
Tel: +46 313 920 100, loipart@loipart.com

LMG Finland Oy, **Finland**
Tel: +358 40 664 6680, lmg@lmg.fi

Loipart USA Inc., **USA**
Tel: +1 954 530 5276, loipartusa@loipart.com

Loipart SEA Pte Ltd, **Singapore**
Tel: +65 670 99 100, contact@loipart.sg

DIMENSIONS

FRONT

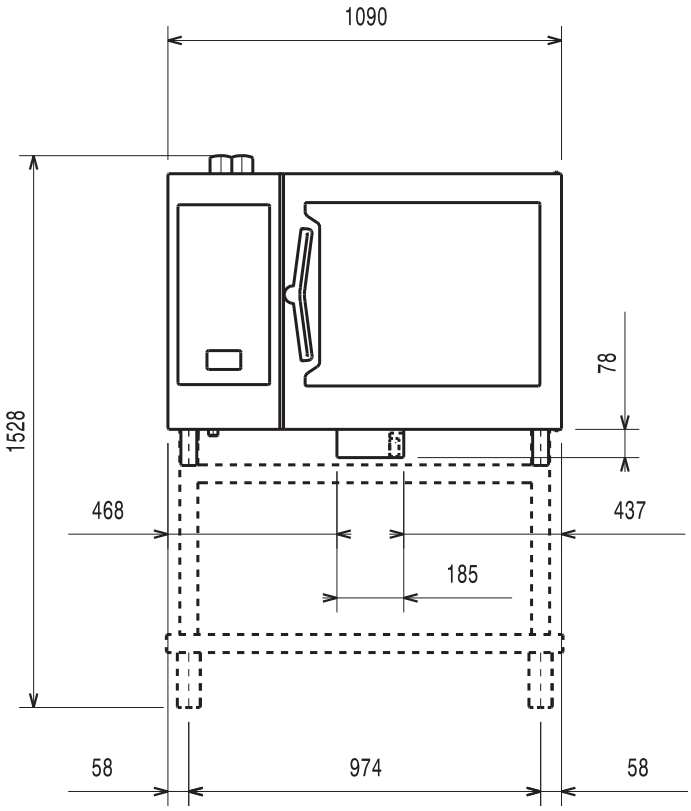

SIDE

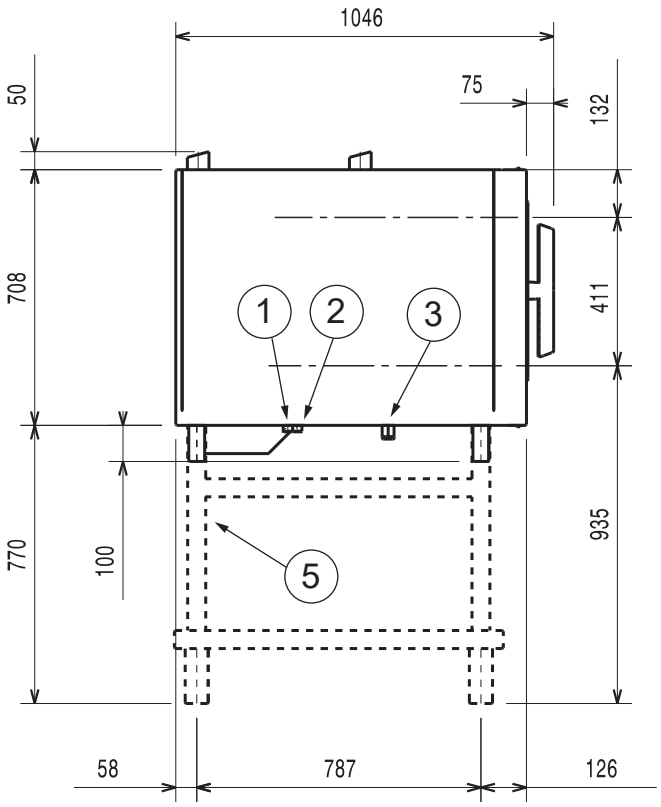

TOP

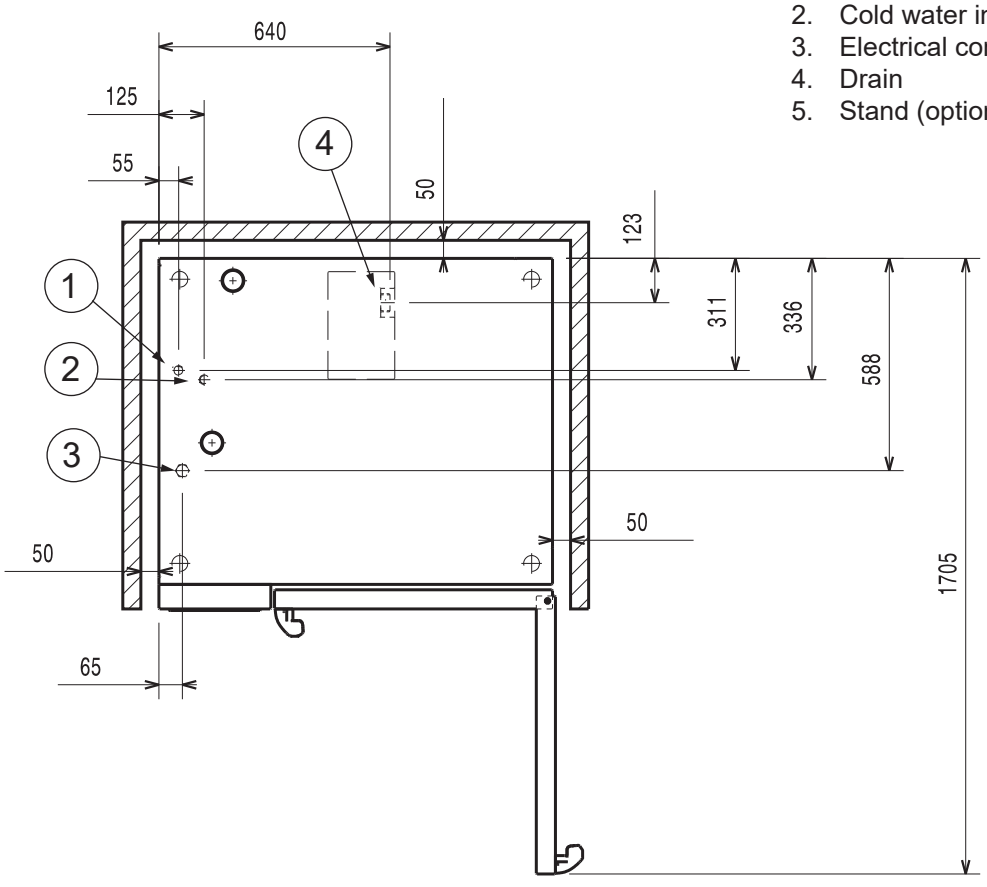

1. Cold water inlet (cleaning system)
2. Cold water inlet (boiler/steam generator)
3. Electrical connection
4. Drain
5. Stand (optional extra)

DETAIL MARINE FOOT

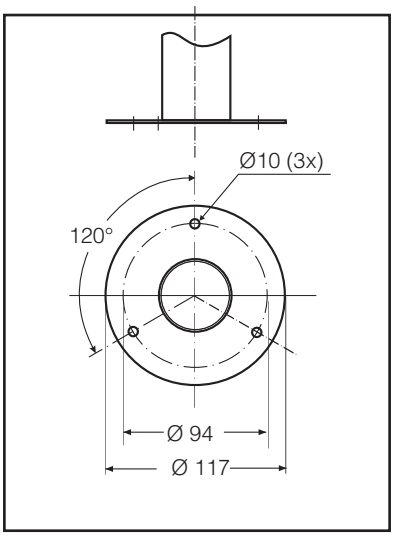

POSITIONING OF MACHINE

normal working	right / left / rear distance 50 mm
work close to heat source	left side distance 350 to 500 mm
service conditions	left side distance 500 mm

- All appliance sides must remain at 50 mm from any surface.

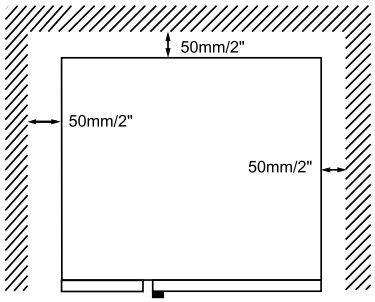

If it's necessary to carry out maintenance works on the appliance, slide it forwards.

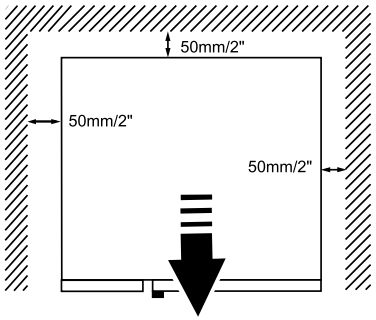

In all models but especially in 20 grids models when possible leave a space of at least 500 mm between the left side of the appliance and the other surfaces to enable maintenance operations.

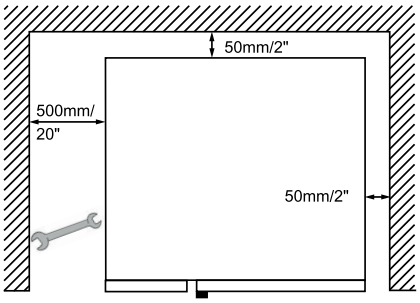

The left gap must be a minimum of 350 mm **if heat sources are acting** on the left side of the appliance.

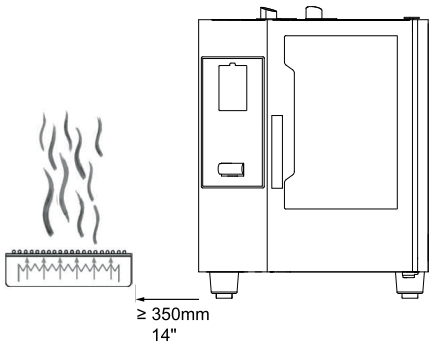

If it is not possible to keep the left side of the appliance a sufficient distance away from heat sources, a heat shield can reduce thermal loads (see accessories catalogue).

If steam from the ventilation pipe cannot be directed into an exhaust hood or a ventilating ceiling, there must be at least 500 mm clearance space above the device.

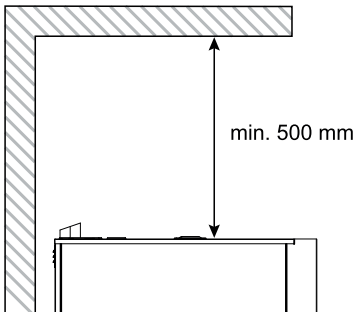

Position the appliance on a flat surface.

If necessary, adjust the height of the worktop by means of the adjustable feet (if available).

Installation instructions for: Skyline Ovens (6 x GN or 10 x GN) on Open Base

For detailed instruction and illustrations please see the stands installation manual.

1. Remove the marine feet from the oven.
2. Install service feet on the oven. These service feet are included separately along with the stand.
3. Mount the marine feet on the stand. The stand can now be fastened to the floor.
4. Fit the oven onto the stand. The service feet on the oven will align and fit securely into the top profiles of the stand.



Image shows how the service feet will fit on the stands top profiles