

Combi Boilerless Oven Skyline Pro 10 GN 2/1

Model: ECOE102C3D30 • Article no: 227927

Power supply: 440V 3Ph ~50-60Hz

The new SkyLine Combi Ovens are designed to deliver outstanding performance through innovative technology and a human-centered approach.

The Pro models feature a digital interface with LED-backlit buttons and a guided selection process, as well as a boilerless steaming system that precisely adds and retains moisture, ensuring high-quality and consistent cooking results. Additionally, a single-sensor core temperature probe is included.

SkyLine models feature a wing-shaped ergonomic handle with hands-free opening, allowing easier tray handling using the elbow. They have a triple thermo-glazed door with an open-frame construction that keeps the outer panel cool. A swing-hinged, easy-release inner glass on the door allows quick cleaning. At the same time, the seamless, hygienic cooking chamber—with rounded corners and 304 AISI stainless steel construction—ensures easy maintenance and durability.

The oven incorporates the OptiFlow air distribution system, designed to achieve optimal performance in cooking evenness and temperature control. This is made possible by the combination of the cooking chamber's design, a venting valve, and a high-precision variable-

MAIN FEATURES

- Digital interface
- Human-centred design with 4-star certification for ergonomics and usability
- Boilerless steaming function
- Single sensor core temperature probe
- OptiFlow air distribution system
- Trolley pitch 63mm with tray stopper
- Triple-glass door
- Skyclean automatic cleaning

ECOE102C3D30, 227927
9/30/2026 2:56 PM

Subject to change without notice.
For correct installation, refer to installation manual.

speed fan. The fan offers five speed levels (300–1500 RPM) and reverse rotation for enhanced cooking uniformity. Additionally, the fan stops in less than five seconds when the door is opened. The oven also features automatic fast cool-down, preheat, and reduced power functions, allowing customized slow-cooking cycles.

Up to 1,000 recipes can be stored in the oven’s memory, allowing you to reproduce consistent results at any time. Recipes can be organized into 16 categories for easier access and faster navigation.

Subject to change without notice.
For correct installation, refer to installation manual.

Technical data

Certifications & regulations

Certifications	CE, Ergocert
IP Class	X5

Dimensions & weight

Width, net (mm)	1090
Depth, net (mm)	971
Height, net (mm)	1058
Weight, net (kg)	163
Weight, gross (kg)	183
Volume, net (m3)	1.12

Electric

Voltage (V)	440
Phase	3
Has neutral	No
Frequency (Hz)	50-60
Connection Cable, length (m)	0
Connector side	Bottom
Loading (kW)	36.9
Max Amps in Phase (A)	54.3
Plug type	None

Functions & appearance

Capacity, pans (pcs)	10
Automatic cleaning system	Yes
Marine feet	Yes
Installation, type	Floor Model, Table Top Model
Noise level < (dB)	70
Oven, type	Combi Boilerless
Temperature, max (°C)	300

General data

Country of origin	Italy
Variant Model Number	ECOE102C3D30

Water

Cold water inlet, diameter (")	3/4
Drain pipe, diameter (mm)	50
Cold water inlet temperature (°C)	30
Water pressure, max (Bar)	4.5
Water pressure, min (Bar)	1

Other information

The oven requires regular cleaning cycles using C22 Cleaning Tabs (0S2395) and the C25-Rinse & Descale Tab (0S2394). Regular use helps keep the equipment clean, ensures optimal performance, and supports compliance with applicable warranty conditions.

Loipart AB (HQ), **Sweden**
Tel: +46 313 920 100, loipart@loipart.com

LMG Finland Oy, **Finland**
Tel: +358 40 664 6680, lmg@lmg.fi

Loipart USA Inc., **USA**
Tel: +1 954 530 5276, loipartusa@loipart.com

Loipart SEA Pte Ltd, **Singapore**
Tel: +65 670 99 100, contact@loipart.sg

DIMENSIONS

FRONT

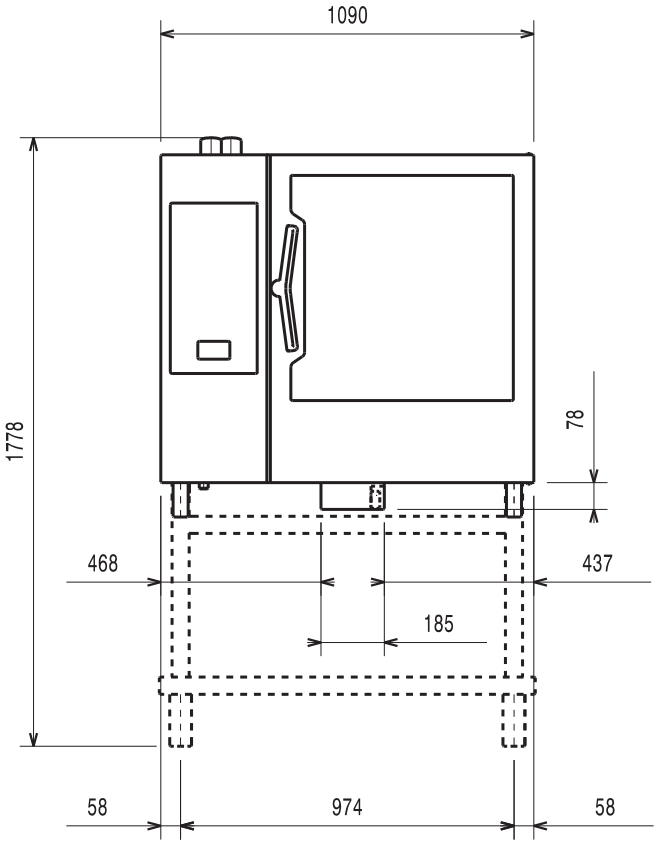

SIDE

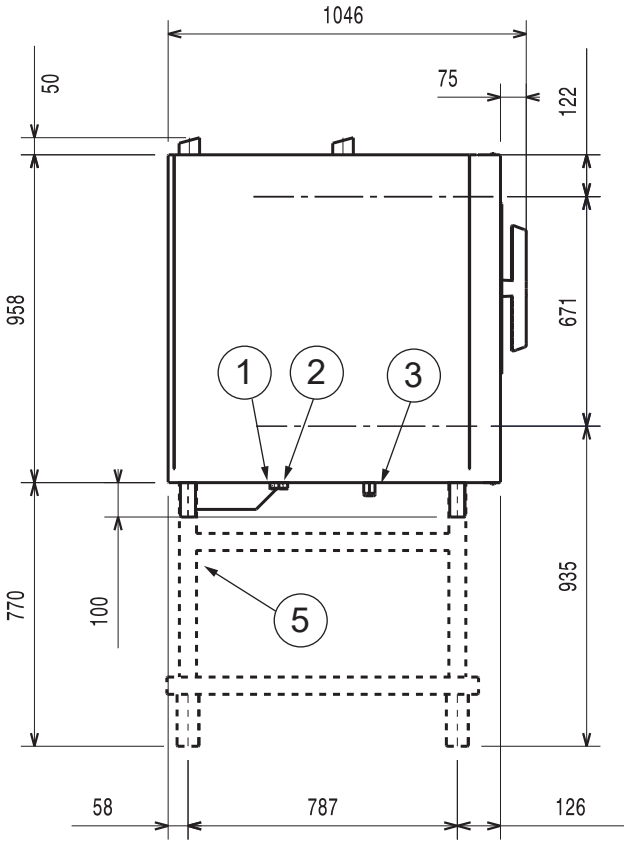

TOP

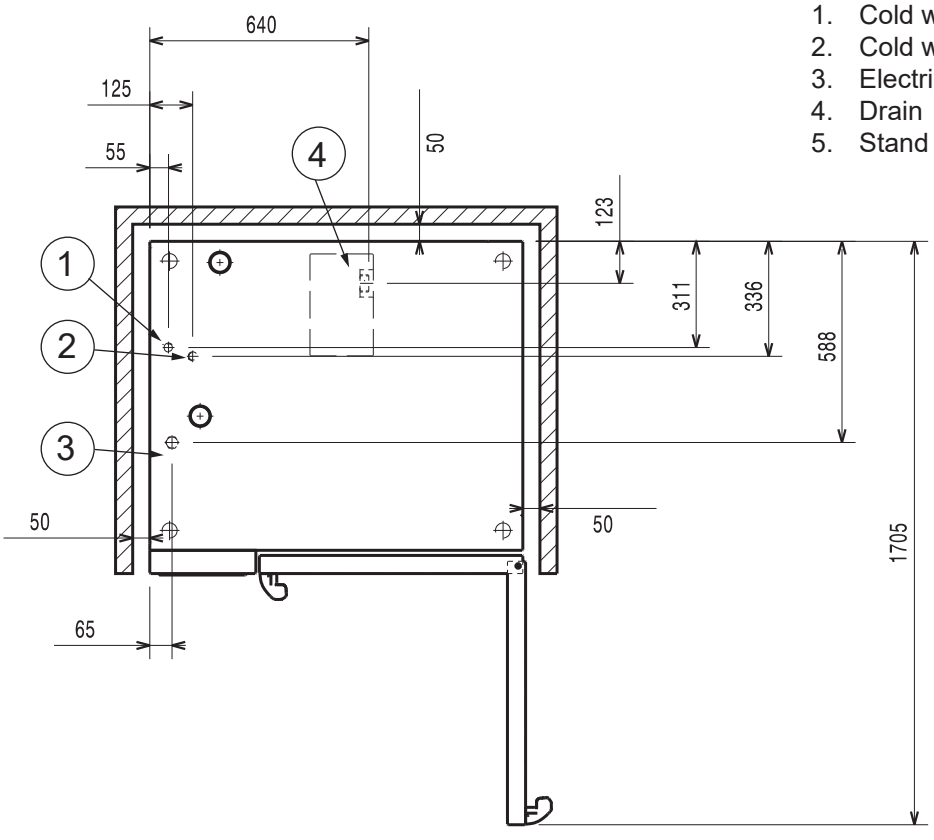

1. Cold water inlet (cleaning system)
2. Cold water inlet (boiler/steam generator)
3. Electrical connection
4. Drain
5. Stand (optional extas)

DETAIL MARINE FOOT

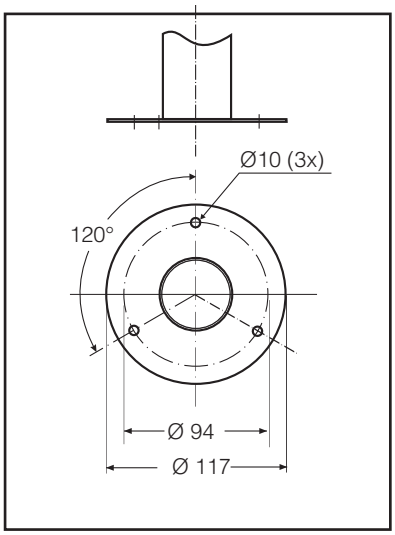

POSITIONING OF MACHINE

normal working	right / left / rear distance 50 mm
work close to heat source	left side distance 350 to 500 mm
service conditions	left side distance 500 mm

- All appliance sides must remain at 50 mm from any surface.

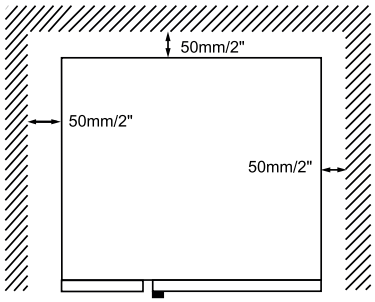

If it's necessary to carry out maintenance works on the appliance, slide it forwards.

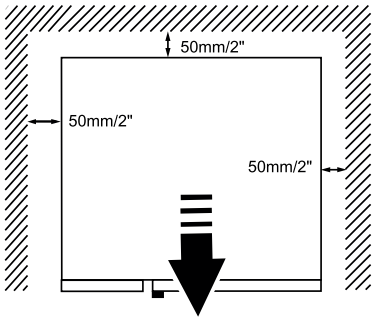

In all models but especially in 20 grids models when possible leave a space of at least 500 mm between the left side of the appliance and the other surfaces to enable maintenance operations.

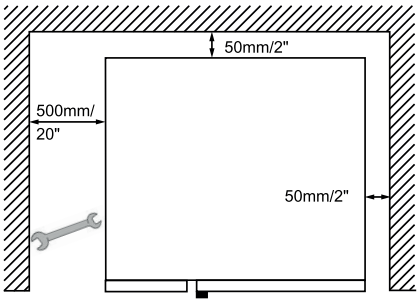

The left gap must be a minimum of 350 mm **if heat sources are acting** on the left side of the appliance.

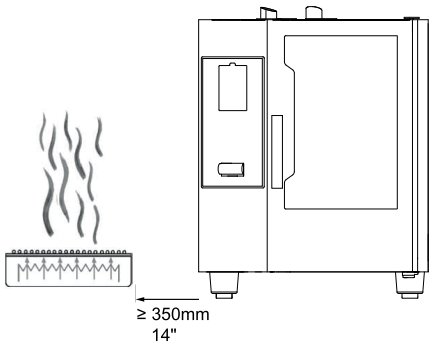

If it is not possible to keep the left side of the appliance a sufficient distance away from heat sources, a heat shield can reduce thermal loads (see accessories catalogue).

If steam from the ventilation pipe cannot be directed into an exhaust hood or a ventilating ceiling, there must be at least 500 mm clearance space above the device.

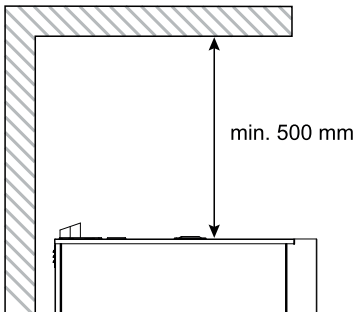

Position the appliance on a flat surface.

If necessary, adjust the height of the worktop by means of the adjustable feet (if available).

DIMENSIONS

MARINE FOOT

