

Combi Boilerless Oven Skyline Pro S 6 GN 1/1

Model: ECOE61K3D30 • Article no: 227624

Power supply: 440V 3Ph ~50-60Hz

The new SkyLine Combi Ovens are designed to deliver outstanding performance with innovative technology and a human-centred approach.

The Pro S models feature a high-resolution full-touch screen interface and a color-blind-friendly panel. A boilerless steaming function that adds and retains moisture for high-quality, consistent cooking results. They also have a single sensor core temperature probe.

Skyline models feature a wing-shaped handle with an ergonomic design and hands-free opening, allowing for easier management of trays with the elbow. They have a triple-thermo-glazed door with an open-frame construction for a cool outside door panel. A swing hinged easy-release inner glass on the door for easy cleaning—seamless hygienic internal chamber with all-rounded corners for easy cleaning and 304 AISI stainless steel construction.

The oven features an OptiFlow air distribution system, designed to achieve maximum performance in cooking evenness and temperature control. This is made possible by the combination of the cooking chamber's design with a venting valve and a high-precision variable-speed fan. The fan features 5-speed levels, ranging from 300 to

MAIN FEATURES

- Touch-screen
- Boilerless steaming function
- Single sensor core temperature probe
- OptiFlow air distribution system
- Trolley pitch 63mm with tray stopper
- Triple-glass door
- Skyclean automatic cleaning
- Human-centred design with 4-star certification for ergonomics and usability

ECOE61K3D30, 227624
9/30/2026 2:55 PM

Subject to change without notice.
For correct installation, refer to installation manual.

1500 RPM, and offers reverse rotation for optimal evenness. Additionally, the fan stops within less than 5 seconds when the door is opened. The oven also features an automatic fast cool-down function, a pre-heat function, and a reduced power function, allowing for customized slow cooking cycles.

A 1000 recipes can be stored in the oven's memory, to recreate the same recipe at any time. The recipes can be grouped into 16 different categories to make it easier to find.

Subject to change without notice.
For correct installation, refer to installation manual.

Technical data

Certifications & regulations

Certifications	CE, Ergocert
IP Class	X5

Dimensions & weight

Width, net (mm)	867
Depth, net (mm)	775
Height, net (mm)	808
Weight, net (kg)	107
Weight, gross (kg)	127
Volume, net (m3)	0.53

Electric

Voltage (V)	440
Phase	3
Has neutral	No
Frequency (Hz)	50-60
Connection Cable, length (m)	0
Connector side	Bottom
Loading (kW)	11.5
Max Amps in Phase (A)	15.1
Plug type	None

Functions & appearance

Capacity, pans (pcs)	6
Automatic cleaning system	Yes
Marine feet	Yes
Installation, type	Floor Model, Table Top Model
Noise level < (dB)	70
Oven, type	Combi Boilerless
Temperature, max (°C)	300

General data

Country of origin	Italy
Variant Model Number	ECOE61K3D30

Loipart AB (HQ), **Sweden**
Tel: +46 313 920 100, loipart@loipart.com

LMG Finland Oy, **Finland**
Tel: +358 40 664 6680, lmg@lmg.fi

Loipart USA Inc., **USA**
Tel: +1 954 530 5276, loipartusa@loipart.com

Loipart SEA Pte Ltd, **Singapore**
Tel: +65 670 99 100, contact@loipart.sg

Water

Cold water inlet, diameter (")	3/4
Drain pipe, diameter (mm)	50
Cold water inlet temperature (°C)	30
Water pressure, max (Bar)	4.5
Water pressure, min (Bar)	1

Other information

The oven requires regular cleaning cycles using C22 Cleaning Tabs (0S2395) and the C25-Rinse & Descale Tab (0S2394). Regular use helps keep the equipment clean, ensures optimal performance, and supports compliance with applicable warranty conditions.

Loipart AB (HQ), **Sweden**
Tel: +46 313 920 100, loipart@loipart.com

LMG Finland Oy, **Finland**
Tel: +358 40 664 6680, lmg@lmg.fi

Loipart USA Inc., **USA**
Tel: +1 954 530 5276, loipartusa@loipart.com

Loipart SEA Pte Ltd, **Singapore**
Tel: +65 670 99 100, contact@loipart.sg

DIMENSIONS

FRONT

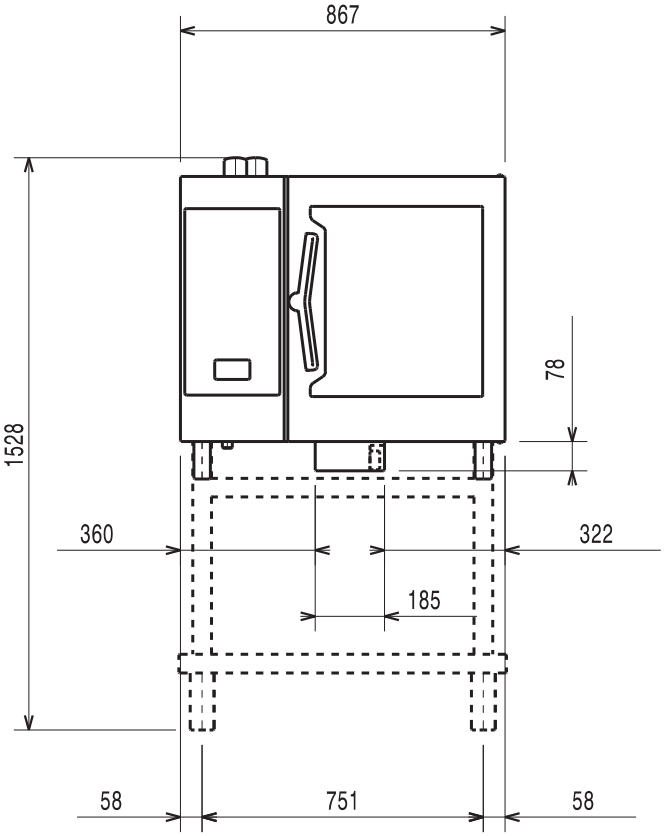

SIDE

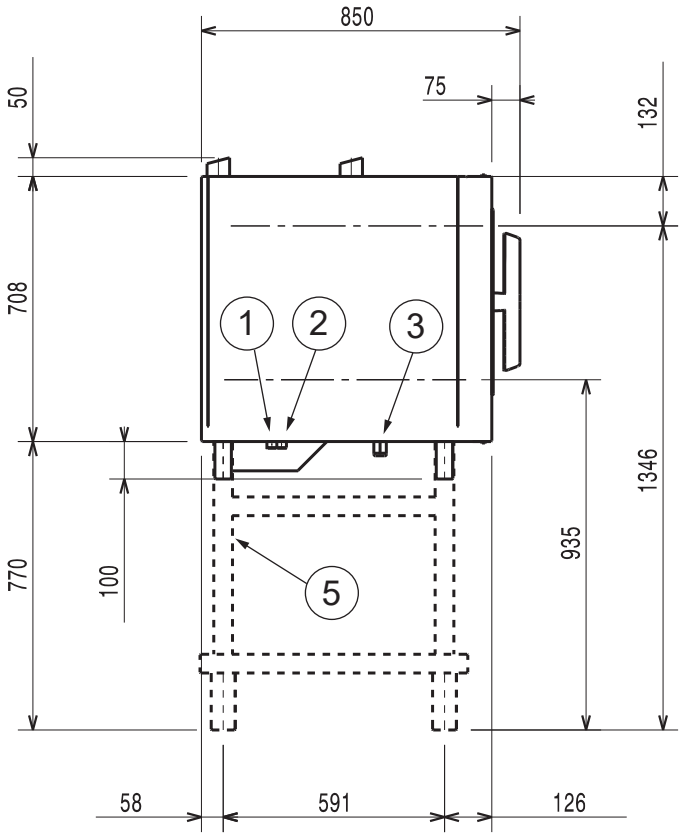

TOP

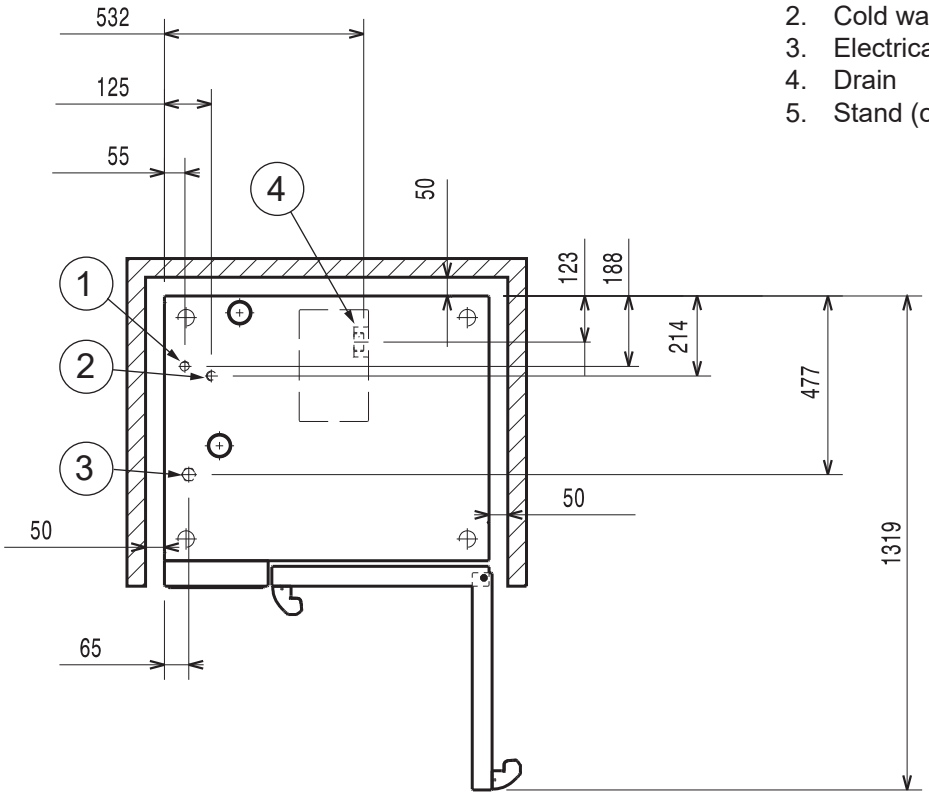

1. Cold water inlet (cleaning system)
2. Cold water inlet (boiler/steam generator)
3. Electrical connection
4. Drain
5. Stand (optional extras)

DETAIL MARINE FOOT

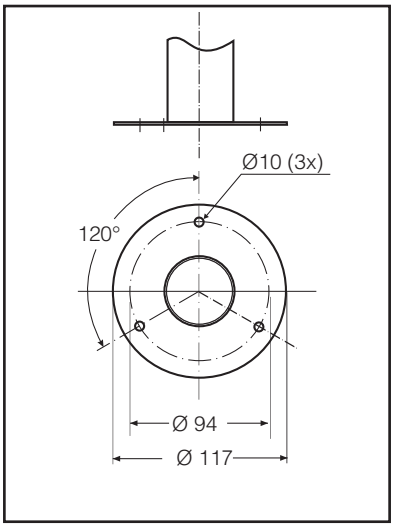

POSITIONING OF MACHINE

normal working	right / left / rear distance 50 mm
work close to heat source	left side distance 350 to 500 mm
service conditions	left side distance 500 mm

- All appliance sides must remain at 50 mm from any surface.

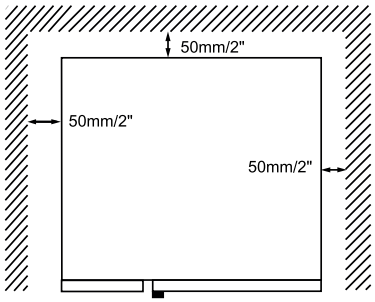

If it's necessary to carry out maintenance works on the appliance, slide it forwards.

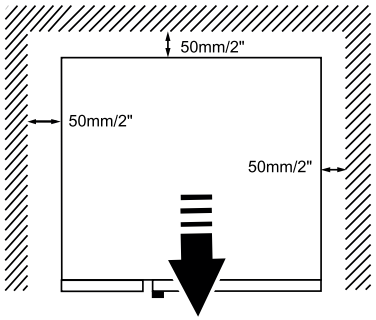

In all models but especially in 20 grids models when possible leave a space of at least 500 mm between the left side of the appliance and the other surfaces to enable maintenance operations.

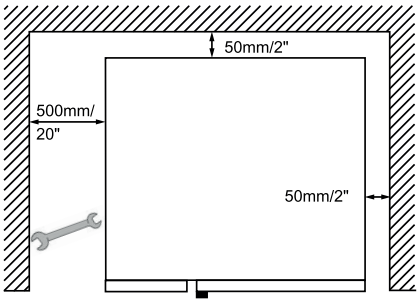

The left gap must be a minimum of 350 mm **if heat sources are acting** on the left side of the appliance.

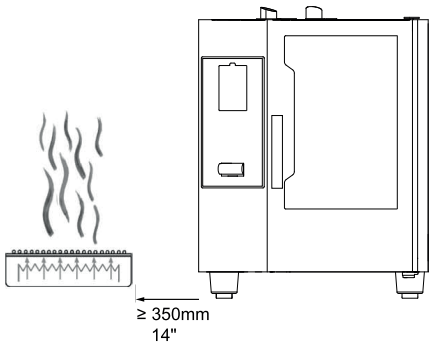

If it is not possible to keep the left side of the appliance a sufficient distance away from heat sources, a heat shield can reduce thermal loads (see accessories catalogue).

If steam from the ventilation pipe cannot be directed into an exhaust hood or a ventilating ceiling, there must be at least 500 mm clearance space above the device.

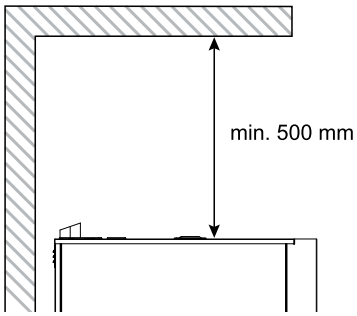

Position the appliance on a flat surface.

If necessary, adjust the height of the worktop by means of the adjustable feet (if available).

Installation instructions for: Skyline Ovens (6 x GN or 10 x GN) on Open Base

For detailed instruction and illustrations please see the stands installation manual.

1. Remove the marine feet from the oven.
2. Install service feet on the oven. These service feet are included separately along with the stand.
3. Mount the marine feet on the stand. The stand can now be fastened to the floor.
4. Fit the oven onto the stand. The service feet on the oven will align and fit securely into the top profiles of the stand.



Image shows how the service feet will fit on the stands top profiles