

Braising Pan 28 L, Height Adjustable, Manual Tilting, 140 mm deep

Model: VKF25D-6M • Article no: FRB702045072M

Power supply: 440V 3Ph ~60Hz

The cast-iron frying table is carefully designed for perfect frying results. The casing is thermally insulated and has a polished stainless steel exterior. Both the column and the counterbalanced lid are made entirely of polished stainless steel, and when the lid is closed, it can serve as an off-loading space or a work surface.

For excellent heat transfer, the pan features powerful, embedded tubular heating elements which are supported by springs and stainless reflectors. The thermostats are placed in drilled holes in the frying pan to improve heating efficiency.

The pan features an electrical control to operate the tilting action. A mounting frame is also available as an optional extra.

MAIN FEATURES

- Extra deep (140mm) cooking surface
- Sturdy and durable design
- Height adjustable column
- Cast iron frying surface
- Stepless heat control
- Thermal-insulated
- High capacity
- Easy to maintain

VKF25D-6M, FRB702045072M
9/30/2026 3:37 PM

Subject to change without notice.
For correct installation, refer to installation manual.

Technical data

Certifications & regulations

IP Class	54

Dimensions & weight

Width, net (mm)	700
Depth, net (mm)	753
Height, net (mm)	925
Weight, net (kg)	165
Weight, gross (kg)	180
Volume, net (m3)	0.49
Volume, gross (m3)	0.63

Electric

Voltage (V)	440
Phase	3
Has neutral	No
Frequency (Hz)	60
Connection Cable, length (m)	0
Fuse (A)	10
Loading (kW)	6
Plug type	None

Functions & appearance

Adjustable height	Yes
Capacity (L)	31
Cooking surface, dimensions (mm)	500x450x140
Adjustable height	Yes
Cast iron pan	Yes
Marine feet	No
Installation, type	Floor Model
Noise level < (dB)	70
Temperature, max (°C)	280
Tilting, type	Manual

General data

Loipart AB (HQ), **Sweden**
Tel: +46 313 920 100, loipart@loipart.com

LMG Finland Oy, **Finland**
Tel: +358 40 664 6680, lmg@lmg.fi

Loipart USA Inc., **USA**
Tel: +1 954 530 5276, loipartusa@loipart.com

Loipart SEA Pte Ltd, **Singapore**
Tel: +65 670 99 100, contact@loipart.sg

Country of origin	Sweden
Variant Model Number	VKF25D-6M

Loipart AB (HQ), **Sweden**
Tel: +46 313 920 100, loipart@loipart.com

LMG Finland Oy, **Finland**
Tel: +358 40 664 6680, lmg@lmg.fi

Loipart USA Inc., **USA**
Tel: +1 954 530 5276, loipartusa@loipart.com

Loipart SEA Pte Ltd, **Singapore**
Tel: +65 670 99 100, contact@loipart.sg

DIMENSIONS

Model: VKF25D-6M *Rev. 1*

FRONT SIDE

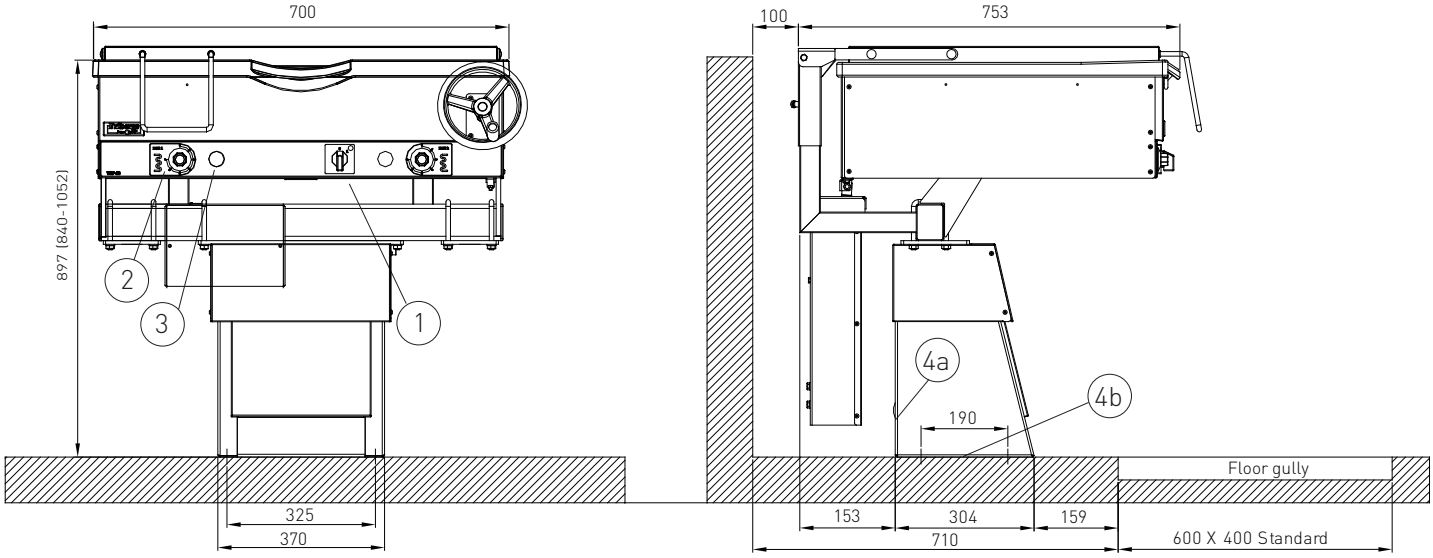

1. Power switch
2. Thermostats, stepless heat control
3. Pilot lamps

4a, 4b. Cable entry for power loading (the electrical cables can either be connected from below into the column or on the back of the pillar).

INSTALLATION OPTION

