

Braising Pan 26 L, Manual Tilting

Model: VKF35-1M • Article no: 70204100

Power supply: 440V 3Ph ~60Hz

The cast-iron frying table is carefully designed for perfect frying results. The casing is thermal-insulated and has a polished stainless steel exterior. Both the column and the counterbalanced lid is entirely made of polished stainless steel, and when the lid is closed, it can be used as an off-loading space or a working surface.

This model has two frying zones and two thermostats, making it possible to fry on one side and keep warm on the other.

For an excellent heat transfer, the pan features powerful, embedded tubular heating elements which are supported by springs and stainless reflectors. The thermostats are placed in drilled holes in the frying pan to improve heating efficiency. A reliable handwheel gear mechanism operates the tilting action.

The table is intended for bolting directly to the foundation. A stainless steel mounting frame is available as an optional extra.

MAIN FEATURES

- Tiltable
- Sturdy and durable design
- Cast iron frying surface
- Stepless heat control
- Thermal-insulated
- High capacity
- Easy to maintain

VKF35-1M, 70204100
9/30/2026 3:37 PM

Subject to change without notice.
For correct installation, refer to installation manual.

Technical data

Certifications & regulations

IP Class	54

Dimensions & weight

Width, net (mm)	855
Depth, net (mm)	753
Height, net (mm)	897
Weight, net (kg)	195
Weight, gross (kg)	210
Volume, net (m3)	0.58
Volume, gross (m3)	0.75

Electric

Voltage (V)	440
Phase	3
Has neutral	No
Frequency (Hz)	60
Connection Cable, length (m)	0
Fuse (A)	16
Loading (kW)	9
Max Amps in Phase (A)	12
Plug type	None

Functions & appearance

Adjustable height	No
Capacity (L)	26
Cooking surface, dimensions (mm)	650x450x90
Adjustable height	No
Cast iron pan	Yes
Marine feet	No
Installation, type	Floor Model
Noise level < (dB)	70
Temperature, max (°C)	280
Tilting, type	Manual

Loipart AB (HQ), **Sweden**
Tel: +46 313 920 100, loipart@loipart.com

LMG Finland Oy, **Finland**
Tel: +358 40 664 6680, lmg@lmg.fi

Loipart USA Inc., **USA**
Tel: +1 954 530 5276, loipartusa@loipart.com

Loipart SEA Pte Ltd, **Singapore**
Tel: +65 670 99 100, contact@loipart.sg

General data

Country of origin	Sweden
Heat Emission (kW)	6.3
Variant Model Number	VKF35-1M

Loipart AB (HQ), **Sweden**
Tel: +46 313 920 100, loipart@loipart.com

LMG Finland Oy, **Finland**
Tel: +358 40 664 6680, lmg@lmg.fi

Loipart USA Inc., **USA**
Tel: +1 954 530 5276, loipartusa@loipart.com

Loipart SEA Pte Ltd, **Singapore**
Tel: +65 670 99 100, contact@loipart.sg

DIMENSIONS

FRONT

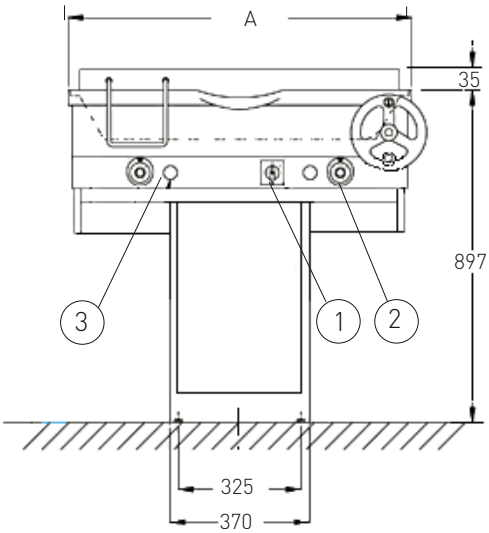

SIDE

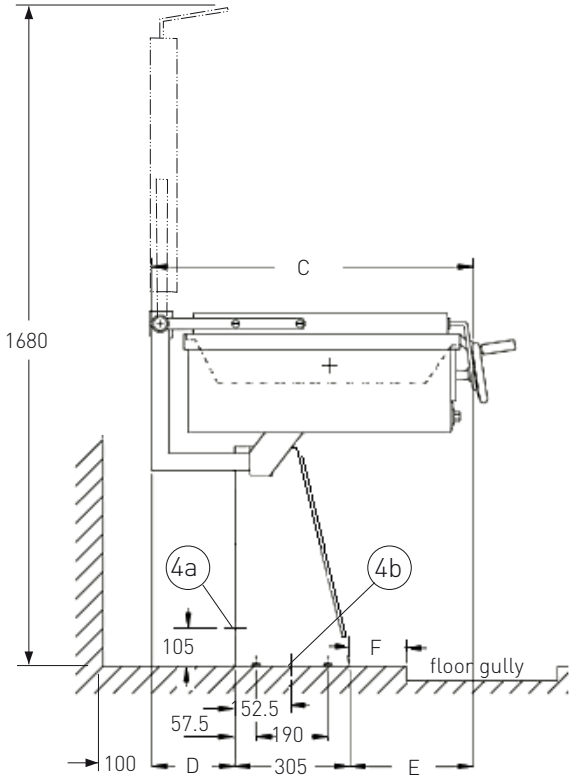

Dimensions (mm)

A	C	D	E	F
855	760	155	300	150

1. Power switch
2. Thermostats, stepless heat control
3. Pilot lamps

4a, 4b. Cable entry for power loading (the electrical cables can either be connected from below into the column or on the back of the pillar).

INSTALLATION OPTION

