

Braising Pan 35 L, Height Adjustable, Manual Tilting

Model: VKF40-4M • Article no: FRB70204205V400350

Power supply: 400V 3Ph ~50Hz

The cast-iron frying table is carefully designed for perfect frying results. The casing is thermal-insulated and has a polished stainless steel exterior. Both the column and the counterbalanced lid is entirely made of polished stainless steel, and when the lid is closed, it can be used as an off-loading space or a working surface.

For an excellent heat transfer, the pan features powerful, embedded tubular heating elements which are supported by springs and stainless reflectors. The thermostats are placed in drilled holes in the frying pan to improve heating efficiency.

This model has two frying zones and two thermostats, making it possible to fry on one side and keep warm on the other. A reliable handwheel gear mechanism operates the tilting action. A mounting frame is also available as an optional extra.

The table is intended for bolting directly to the foundation. A stainless steel mounting frame is available as an optional extra.

MAIN FEATURES

- Sturdy and durable design
- Height adjustable column
- Cast iron frying surface
- Stepless heat control
- Thermal-insulated
- High capacity
- Easy to maintain

VKF40-4M, FRB70204205V400350
9/30/2026 3:37 PM

Subject to change without notice.
For correct installation, refer to installation manual.

Technical data

Certifications & regulations

IP Class	54

Dimensions & weight

Width, net (mm)	910
Depth, net (mm)	835
Height, net (mm)	925
Weight, net (kg)	215
Weight, gross (kg)	230
Volume, net (m3)	0.93
Volume, gross (m3)	1.21

Electric

Voltage (V)	400
Phase	3
Has neutral	No
Frequency (Hz)	50
Connection Cable, length (m)	0
Fuse (A)	20
Loading (kW)	12.6
Plug type	None

Functions & appearance

Adjustable height	Yes
Capacity (L)	35
Cooking surface, dimensions (mm)	720x550x90
Adjustable height	Yes
Cast iron pan	Yes
Marine feet	No
Installation, type	Floor Model
Noise level < (dB)	70
Temperature, max (°C)	280
Tilting, type	Manual

General data

Country of origin	Sweden
Variant Model Number	VKF40-4M

Loipart AB (HQ), **Sweden**
Tel: +46 313 920 100, loipart@loipart.com

LMG Finland Oy, **Finland**
Tel: +358 40 664 6680, lmg@lmg.fi

Loipart USA Inc., **USA**
Tel: +1 954 530 5276, loipartusa@loipart.com

Loipart SEA Pte Ltd, **Singapore**
Tel: +65 670 99 100, contact@loipart.sg

DIMENSIONS

FRONT

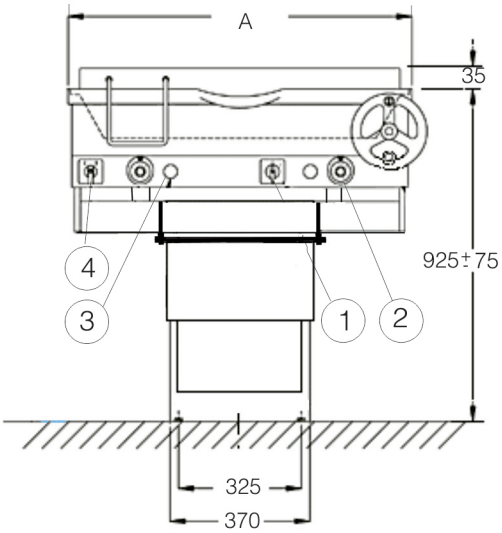

SIDE

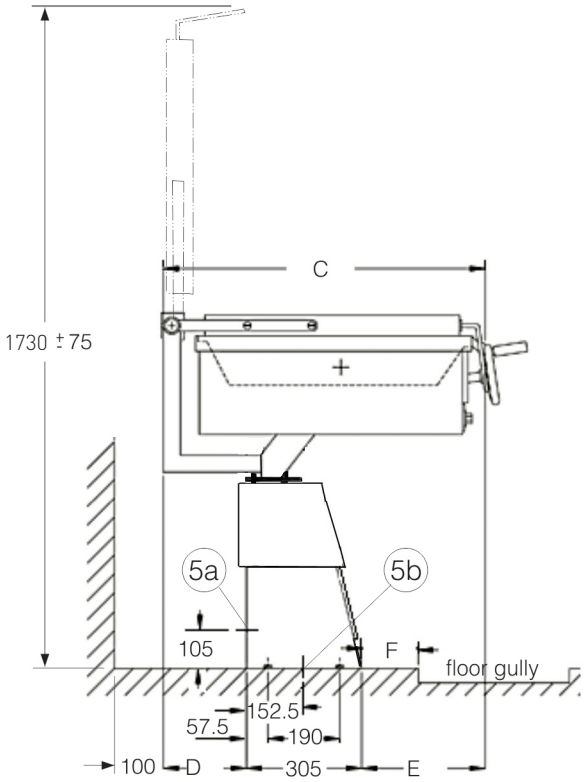

Dimensions (mm)

A	C	D	E	F
910	850	218	325	175

1. Power switch
2, 4. Thermostats, stepless heat control
3. Pilot lamps
5a, 5b. Cable entry for power loading (the electrical cables can either be connected from below into the column or on the back of the pillar).

INSTALLATION OPTION

